GMA 342/345
Installation Manual

© 2019
Garmin Ltd. or its subsidiaries
All Rights Reserved

Except as expressly provided herein, no part of this manual may be reproduced, copied, transmitted, disseminated, downloaded or stored in any storage medium, for any purpose without the express prior written consent of Garmin. Garmin hereby grants permission to download a single copy of this manual and of any revision to this manual onto a hard drive or other electronic storage medium to be viewed and to print one copy of this manual or of any revision hereto, provided that such electronic or printed copy of this manual or revision must contain the complete text of this copyright notice and provided further that any unauthorized commercial distribution of this manual or any revision hereto is strictly prohibited.

©2017 The Bluetooth® word mark and logos are registered trademarks owned by Bluetooth SIG, Inc. and any use of such marks by Garmin is under license. Other trademarks and trade names are those of their respective owners.

Garmin International, Inc.
1200 E. 151st Street
Olathe, KS 66062 USA
Aviation Panel-Mount Technical Support Line (Toll Free) 1.888.606.5482

Garmin (Europe) Ltd.
Liberty House, Hounsdown Business Park
Southampton, Hampshire SO40 9LR U.K.

Garmin aviation support and warranty information can be found at www.flygarmin.com.

RECORD OF REVISIONS

Revision	Revision Date	Description
1	01/17/17	Initial Release
2	09/18/17	Updated Transmitter Grant of Equipment Authorization info
3	04/05/18	Updated Post Installation Checkout Procedure, added 3-COM unit info
4	09/17/19	Added missing pin info to Table 4-2

CURRENT REVISION DESCRIPTION

Revision	Page Number	Section Number	Description of Change
4	4-4	4.2.2	Added missing pin 35 J3402 info in Table 4-2
	C-7	Appdx C	Added LEMO connector drawing Figure C-7

INFORMATION SUBJECT TO EXPORT CONTROL LAWS

This document may contain information which is subject to the Export Administration Regulations ("EAR") issued by the United States Department of Commerce (15 CFR, Chapter VII, Subchapter C) and which may not be exported, released, or disclosed to foreign nationals inside or outside of the United States without first obtaining an export license. The preceding statement is required to be included on any and all reproductions in whole or in part of this manual.

DEFINITIONS OF WARNINGS, CAUTIONS, AND NOTES

WARNING

A warning means injury or death is possible if the instructions are not obeyed.

CAUTION

A caution means that damage to the equipment is possible.

NOTE

A note gives more information.

WARNING

This product, its packaging, and its components contain chemicals known to the State of California to cause cancer, birth defects, or reproductive harm. This Notice is being provided in accordance with California's Proposition 65. If you have any questions or would like additional information, please refer to our web site at www.garmin.com/prop65.

NOTE

Unless otherwise noted, information listed for the GMA 345 also applies to the GMA 345 3-COM version unit.

SOFTWARE LICENSE AGREEMENT

BY USING THE DEVICE, COMPONENT OR SYSTEM MANUFACTURED OR SOLD BY GARMIN ("THE GARMIN PRODUCT"), YOU AGREE TO BE BOUND BY THE TERMS AND CONDITIONS OF THE FOLLOWING SOFTWARE LICENSE AGREEMENT. PLEASE READ THIS AGREEMENT CAREFULLY. Garmin Ltd. and its subsidiaries ("Garmin") grants you a limited license to use the software embedded in the Garmin Product (the "Software") in binary executable form in the normal operation of the Garmin Product. Title, ownership rights, and intellectual property rights in and to the Software remain with Garmin and/or its third-party providers. You acknowledge that the Software is the property of Garmin and/or its third-party providers and is protected under the United States of America copyright laws and international copyright treaties. You further acknowledge that the structure, organization, and code of the Software are valuable trade secrets of Garmin and/or its third-party providers and that the Software in source code form remains a valuable trade secret of Garmin and/or its third-party providers. You agree not to reproduce, decompile, disassemble, modify, reverse assemble, reverse engineer, or reduce to human readable form the Software or any part thereof or create any derivative works based on the Software. You agree not to export or re-export the Software to any country in violation of the export control laws of the United States of America.

TABLE OF CONTENTS

PARAGRAPH **PAGE**

Section 1 General Description 1-1
1.1 Introduction 1-1
1.2 Equipment Description 1-1
1.3 Technical Specifications 1-3
1.4 Certification 1-7
1.5 Operating Instructions 1-10
1.6 Reference Documents 1-10

Section 2 Installation Overview 2-1
2.1 Introduction 2-1
2.2 Installation Materials 2-1
2.3 Available Accessories 2-2
2.4 Installation Considerations 2-4
2.5 Cabling and Wiring 2-7
2.6 Electrical Bonding 2-7
2.7 Cooling Air 2-8
2.8 Configuration, and Adjustment Options 2-8
2.9 Updating Software 2-13
2.10 Electrical Noise 2-14
2.11 Mounting Requirements 2-15

Section 3 Installation Procedure 3-1
3.1 Unpacking Unit 3-1
3.2 Electrical Connections 3-1
3.3 Antenna Installation 3-2
3.4 Shield Block Backshell Installation Instructions 3-2
3.5 Backshell Assembly 3-3
3.6 Unit Installation 3-3
3.7 Post Installation Checkout 3-4
3.8 Continued Airworthiness 3-7
3.9 Diagnostics Information 3-7
3.10 Disabling Bluetooth Connectivity (GMA 345 only) 3-8

Section 4 System Interconnects 4-1
4.1 Connector Description 4-1
4.2 Pin List 4-1
4.3 Aircraft Power 4-4
4.4 Lighting Bus 4-5
4.5 Audio Inputs/Outputs and Mic Keys 4-5

PARAGRAPH **PAGE**

4.6 Discrete Inputs 4-10
4.7 Marker Beacon 4-12

Section A Installation Considerations for Upgrading from a Garmin GMA 340 ..... A-1
A.1 Mechanical Considerations A-1
A.2 Electrical Considerations A-1
A.3 GMA 340 to GMA 342/345 Retrofit Connections A-2

Appendix B Outline and Installation Drawings B-1

Appendix C Interconnect Drawings C-1

1 GENERAL DESCRIPTION

1.1 Introduction

This manual is intended to provide mechanical and electrical information for use in the planning and design of an installation of the GMA 342/345 into an aircraft. This manual is not a substitute for an approved airframe-specific maintenance manual, installation design drawing, or complete installation data package. Attempting to install equipment by reference to this manual alone and without first planning or designing an installation specific to your aircraft may compromise your safety and is not recommended. The content of this manual assumes use by competent and qualified avionics engineering personnel and/or avionics installation specialists using standard aviation maintenance practices in accordance with Title 14 of the Code of Federal Regulations and other relevant accepted practices. This manual is not intended for use by individuals who do not possess the competencies and abilities set forth above.

NOTE

Garmin recommends installation of the GMA 342/345 by a Garmin-authorized installer. To the extent allowable by law, Garmin will not be liable for damages resulting from improper or negligent installation of the GMA 342/345. For questions, please contact Garmin Aviation Product Support at 1-888-606-5482.

1.2 Equipment Description

The Garmin GMA 342/345 Audio Panels are TSO-certified products and have received FAA approval.

The GMA 342/345 units are high-fidelity digital audio panels that collect, process, and distribute audio signals to crew and passengers. The GMA 342/345 digital signal processing (DSP) core filters the audio signals and provides digital audio routing to minimize noise.

The GMA 342/345 provides a speaker output for use as a cockpit speaker. Both also include a cockpit voice recorder and playback feature to help in situations where a COM transmission may need to be heard again. The GMA 345 includes a *Bluetooth*® transceiver for listening to music and making phone calls, or sending headset audio to a VIRB XE, and a 10 Watt USB charge port for phones and tablets. The GMA 342 does not have Bluetooth capability and includes an available front panel 3.5 mm jack for plugging in phones or tablets for music audio or cell phone calls.

Other features include intuitive configuration, a lighting bus input, SD Card socket for code loads and Bluetooth firmware updates (only GMA 345 has Bluetooth capability), an 8 position DIP switch for installation settings, and multiple audio switching functions. LED-illuminated push-buttons allow audio selection and annunciation for selection of NAV, COM, and other audio. Photocell dimming circuitry automatically adjusts the brightness of the annunciators, with backlighting controlled by the aircraft lighting bus. A fail-safe circuit connects the pilot's headset and microphone directly to COM 1 and a fail-safe warning audio input in the event that power is interrupted or the unit is turned off.

The GMA 345 has 2 music inputs in addition to the Bluetooth transceiver, NAV, COM, and ICS selections. The GMA 342 has 2 music inputs in addition to the front panel 3.5 mm jack, NAV, COM, and ICS selections. Both the GMA 345 and GMA 342 are easily configurable without an external PC connection. Both GMA 345 and GMA 342 have automatic intercom squelch and optional keyed intercom squelch. These audio panels were designed to be drop in replacements for the GMA 340, and do not interface or integrate to any system. The standard (2-COM) version of these audio panels only support two COMs, however a 3-COM version of the GMA 345 (011-03520-20) is also available. For installations that require more than 2 COMs the recommended audio panel is the GMA 345 3-COM, GMA 350H, or GMA 350Hc.

NOTE

Unless otherwise noted, information listed for the GMA 345 also applies to the GMA 345 3-COM version unit.

1.2.1 Features Summary

Table 1-1 GMA 342/345 Features Summary

Feature	GMA 342	GMA 345	GMA 345 3-COM
Bluetooth Transceiver	None	1 - Not shared with Music 1 or Music 2	
USB Charge Port	None	1	
3.5 mm 4-Conductor Jack Input	1 - not shared with Music 1 or Music 2	None	
Tranceiver Channels	3 - COM 1, COM 2, TEL		4 - COM 1, COM 2, COM 3, TEL
Receiver Inputs	5 - NAV 1, NAV 2, AUX 1, AUX 2, AUX 3*		5 - NAV 1, NAV 2, AUX 1, AUX 2, AUX 3 **
Microphone Inputs	6 - Pilot, Copilot, 4 Passenger		
Microphone Keys	2 - Pilot, Copilot		
Music Inputs (rear connector)	2		
Alert Inputs (unswitched)	4		
Speaker Output	1		
Headset Outputs	3 - Pilot, Copilot, Passenger (passenger output can drive 4 headsets)		
Discrete Inputs	5		
Discrete Outputs	3		
Failsafe Channel	1 - Only Heard During Power Off Mode		
Lighting Bus	1		
SD Card Socket	1		
8 Position DIP Switch	1		

*Note that two buttons (AUX1 and AUX 2) are used to select/deselect the 3 AUX inputs. Pressing the AUX 1 button selects/deselects the AUX 1 and AUX 3 receivers. Pressing the AUX2 button selects/deselects the AUX 2 receiver.

**Note that one button (AUX) is used to select/deselect all 3 AUX inputs. When AUX is selected, audio from all three AUX inputs is merged and heard together.

1.3 Technical Specifications

It is the responsibility of the installing agency to obtain the latest revision of the GMA 34X Environmental Qualification Form. This form is available directly from Garmin under the following part number:

GMA 34X Environmental Qualification Form, Garmin part number 005-00880-01

To obtain a copy of this form, see the dealer/OEM portion of the Garmin web site (www.garmin.com).

1.3.1 Physical Characteristics

Table 1-2 Physical Characteristics GMA 342/345

Characteristic	Specification
Bezel Height	1.30 inches (33.0 mm)
Bezel Width	6.30 inches (160.0 mm)
Rack Height (Dimple to Dimple)	1.33 inches (34.0 mm)
Rack Width	6.30 inches (160.0 mm)
Depth Behind Panel with Connectors (measured from face of aircraft panel to rear of connector backshells)	8.09 inches (205.0 mm)
GMA 342/345 Weight (Unit Only)	1.10 lbs (0.49 kg)
GMA 342/345 Weight (Installed with rack, backplate, and connectors)	1.78 lbs (0.81 kg)

1.3.2 Electrical Specifications

Table 1-3 Electrical Characteristics

Characteristic	Specification
Environmental Compliance	RTCA DO-160F
Software Compliance	RTCA DO-178B Level D
Maximum Absolute Audio Delay	The Input to Output delay is less than 1.1 ms for all audio I/O excluding entertainment audio (Music, Telephone, and Bluetooth)
Altitude	55,000 Feet Overpressure - 15,000 Feet
Maximum Days of Continuous Operation	49
Audio Panel Functions	Dedicated Transceiver inputs: 3 (including TEL) for GMA 342 and 345, 4 (including TEL) for GMA 345 3-COM unit Dedicated Receiver inputs: 5 (per notes in Table 1-1 regarding which AUX inputs are uniquely selectable) Alert (unswitched) inputs: 4 (each with configurable volume) Input impedance: 600 Ω Input isolation: 60 dB minimum Alert/Receiver/Transceiver bandwidth: 100 Hz to 6.5 kHz Special functions: Fail-safe operation All inputs use MASQ™ processing (Master Avionics Squelch) Max input 5 Vrms
Intercom Functions	Positions: 6 - Pilot, Copilot, 4 Passengers Volume controls: 4 (Pilot ICS, Pilot Music, Copilot/Passenger ICS, Copilot/Passenger Music) Microphone input impedance: 150 Ω (compatible with 150 to 600 Ω mics) Microphone bias voltage: 11 Vdc delivered through 470 Ω Intercom isolation modes: 3 - Pilot, Crew, and All Telephone interfaces: 1 full-duplex (use rear LRU pins or Bluetooth transceiver) ICS Auto-Squelch/VOX: Independent DSP (digital signal processing) determined thresholds for each mic. Note that keyed intercom is optional. Auto-squelch not available when using keyed ICS.
Headphone Outputs	Output amplifiers: 3 Stereo - Pilot, Copilot, Passengers Power, Load, and Distortion: 65 mW into 150 Ohms with <10% THD+N @ 10% output <3% THD+N Typical Operating Distortion: <1% THD+N 3dB Frequency Response Bandwidth: 20 Hz to 20 kHz for Music 350 Hz to 6.5 kHz for Other Audio (MICs, Radios, Alerts)

Table 1-3 Electrical Characteristics

Characteristic	Specification
Music Functions	Music inputs (stereo): 2 Music input impedance: 600 Ω (differential) Music gain: +24dB @ max. volume Music input level:<200 mVrms for full power* output @ max music volume knob position (typ.) 3.0 Vrms max music input level Music bandwidth: 20 Hz to 20 kHz @ full power output Music distortion: <0.1% THD+N (typ.) @ full power, full bandwidth *Full power output refers to 65 mW into 150 Ω at the headset
Bluetooth Connectivity GMA 345 only	Bluetooth 3.00 Compliant, allows music, cell phone calls, and interface with the VIRB XE action camera. Bluetooth capability supports HFP (including HFP v1.6 Wide Band Speech mode), A2DP, and AVRCP. The GMA 345 stores 10 paired devices and overwrites the least recently connected device when a new device is paired. Only 1 Bluetooth connection allowed at one time. The VIRB XE cannot be connected when using a phone (and vice versa).
USB Charge Port GMA 345 only	USB charge port - Rated for 10 W. The GMA 345 charge port features USB port detection that will connect the optimum charge rate for the device connected. The charge port supports a maximum of 2.1 Amp charge current for devices. The USB charge port will shutdown and protect the GMA 345 for current draw above 2.3 Amps.
3.5 mm Front Panel Jack GMA 342 only	The GMA 342 has a standard 3.5 mm front panel jack for connecting by cable phones or tablets. The front panel allows stereo music to be played from a device, and also allows cell phone calls to be made through the GMA 342. The front panel jack is a 4 conductor jack, allowing either a standard 3 conductor plug for audio, and also 4 conductor plugs used by some cell phones for phone calls. For stereo music input, the jack is rated to 1.5 Vrms and has 5 kohm input impedance.
Marker Beacon Receiver	Frequency: Crystal controlled at 75 MHz Sensitivity: LO 1000 µV hard; HI 200 µV hard Selectivity: 6 dB @ ±10 kHz min, 40 dB @ ±200 kHz max. Input impedance: 50Ω External lamp drive: 125 mA max each output Other outputs: Middle MKR sense Special functions: SmartMuteTM marker audio muting

Table 1-4 Speaker Output

Aircraft Voltage	Speaker Impedance	Output Power
14V	4 Ω	3 Watts
	8 Ω	Not Recommended
28V	4 Ω	10 Watts
	8 Ω	7 Watts

1.3.3 Power Requirements

The GMA 342/345 will operate down to emergency voltage (9 Volts). Below 11 Volts, the USB charge port (GMA 345 only) and the speaker (both GMA 342 and GMA 345) are disabled.

Table 1-5 GMA 342/345 Power Requirements

Characteristic	Specification
Input Voltage Range	11 to 33 Vdc
Leakage Current*	< 1 mA

*Current the unit draws when turned off (GMA 342/345 turned off by the knob).

Table 1-6 GMA 342 Power Requirements

Characteristic	Current Draw	Power Consumption
Idle Current*	0.34 A @ 14 VDC 0.19 A @ 28 VDC	4.76 W @ 14 VDC 5.32 W @ 28 VDC
Typical Operating Current	0.83 A @ 14 VDC 0.43 A @ 28 VDC	11.62 W @ 14 VDC 12.04 W @ 28 VDC
Maximum Current	1.19 A @ 14 VDC 0.90 A @ 28 VDC	16.66 W @ 14 VDC 25.20 W @ 28 VDC

*Unit current drawn with power applied, no audio, and minimum lighting.

Table 1-7 GMA 345 Power Requirements

Characteristic	Current Draw	Power Consumption
Idle Current*	0.34 A @ 14 VDC 0.19 A @ 28 VDC	4.76 W @ 14 VDC 5.32 W @ 28 VDC
Typical Operating Current without USB charge port being used.	0.83 A @ 14 VDC 0.43 A @ 28 VDC	11.62 W @ 14 VDC 12.04 W @ 28 VDC
Maximum Current with no USB charge port connection	1.19 A @ 14 VDC 0.90 A @ 28 VDC	16.66 W @ 14 VDC 25.20 W @ 28 VDC
Maximum Current with USB charge port connection	2.39 A @ 14 VDC 1.49 A @ 28 VDC	33.46 W @ 14 VDC 41.72 W @ 28 VDC

*Unit current drawn with power applied, no audio, and minimum lighting.

1.4 Certification

The conditions and tests required for TSO approval of this article are minimum performance standards. It is the responsibility of those installing this article either on or within a specific type or class of aircraft to determine that the aircraft installation conditions are within the TSO standards. TSO articles must have separate approval for installation in an aircraft. The article may be installed only if performed under 14 CFR part 43 or the applicable airworthiness requirements.

The GMA 345 and GMA 342 have been shown to meet compliance with the claimed TSO(s) when interfaced with the equipment defined in this installation manual, and installed in accordance with the requirements and limitations as defined in this installation manual.

The Appliance Project Identifier (API) for the GMA 342 and GMA 345 is GMN-01319. The API has been used for project identification with the FAA. See applicable hardware and software part numbers to identify appliance approvals.

1.4.1 TSO Compliance

Table 1-8 GMA 342/345 (011-03520-00 and 011-03520-10) TSO Compliance

Function	TSO/ETSO/ RTCA/EUROCAE	Category	Applicable LRU Software Part Numbers	Applicable LRU Boot Block Part Numbers
Airborne Radio Marker Receiving Equipment	TSO-C35d DO-143	A	All 006-B2227-0( )	All 006-B2227-B( )
Aircraft Audio Systems and Equipment	TSO-C139a DO-214A	Class Ib		

Table 1-9 GMA 345 (011-03520-20) TSO Compliance

Function	TSO/ETSO/ RTCA/EUROCAE	Category	Applicable LRU Software Part Numbers	Applicable LRU Boot Block Part Numbers
Airborne Radio Marker Receiving Equipment	TSO-C35d DO-143	A	All 006-B2227-0() except 006-B2227-00 and 006-B2227-01	All 006-B2227-B( )
Aircraft Audio Systems and Equipment	TSO-C139a DO-214A	Class Ib		

1.4.2 TSO Deviations

Table 1-10 GMA 342/345 (011-03520-00, 011-03520-10, 011-03520-20) TSO Deviations

TSO	Deviation
TSO-C35d	Garmin received a deviation from TSO-C35d to not permanently and legibly marking the unit with each TSO's required information.
	Garmin received a deviation from TSO-C35d to use FAR §45.15(b) instead of FAR §37.7(d) as the general rules governing holders of the TSO authorizations.
	Garmin received a deviation from TSO-C35d to use RTCA DO-160F instead of RTCA DO-138 as the standard for Environmental Conditions and Test Procedures for Airborne Equipment.

1.4.3 Transmitter Grant of Equipment Authorization

1. FCC

GMA 345 Contains FCC ID: QOQWT32I

NOTE
This device complies with Part 15 of the FCC Rules. Operation is subject to the following two conditions: (1) this device may not cause harmful interference, and (2) this device must accept any interference received, including interference that may cause undesired operation.

FCC RF Radiation Exposure Statement:
This equipment complies with FCC radiation exposure limits set forth for an uncontrolled environment. End users must follow the specific operating instructions for satisfying RF exposure compliance. This transmitter meets both portable and mobile limits as demonstrated in the RF Exposure Analysis. This transmitter must not be co-located or operating in conjunction with any other antenna or transmitter except in accordance with FCC multi-transmitter product procedures.

2. IC

GMA 345 Contains IC: 5123A-BGTWT32I

NOTE
This device complies with Innovation, Science and Economic Development Canada license-exempt RSS standard(s). Operation is subject to the following two conditions: (1) this device may not cause interference, and (2) this device must accept any interference, including interference that may cause undesired operation of the device.

Cet appareil est conforme aux normes RSS sans licence du ministére Innovation, Sciences et Développement économique Canada. Son fonctionnement est soumis aux deux conditions suivantes : (1) ce périphérique ne doit pas causer d'interférences et (2) doit accepter toute interférence, y compris les interférences pouvant entraîner un fonctionnement indésirable de l'appareil.

3. Declaration of Conformity (GMA 345)

Hereby, Garmin declares that this product is in compliance with the Directive 2014/53/EU. The full text of the EU declaration of conformity is available at the following internet address: www.garmin.com/compliance.

Radio frequency/protocol (GMA 345): Bluetooth® wireless technology 2.4 GHz @ -0.49 dBm nominal

1.5 Operating Instructions

For operating instructions, refer to the applicable GMA 342 Pilot's Guide (190-01878-00), GMA 345 Pilot's Guide (190-01878-01), or GMA 345 3-COM Pilot's Guide (190-01878-05).

1.6 Reference Documents

The following publications are sources of additional information for installing the GMA 342/345. The installer should read all referenced materials along with this manual before attempting installation.

Table 1-11 Reference Documents

Part Number	Document
190-00149-01	GMA 340 Installation Manual
190-00313-09	Shield Block Installation Instructions
190-01878-00	GMA 342 Pilot's Guide
190-01878-01	GMA 345 Pilot's Guide
190-01878-05	GMA 345 3-COM Pilot's Guide

2 INSTALLATION OVERVIEW

2.1 Introduction

This section provides the necessary information for the installation and checkout of the GMA 342/345 Audio Panel. Installation of the GMA 342/345 will differ according to equipment location and other factors. The appendices contain interconnect wiring diagrams, mounting dimensions, and information pertaining to installation.

Careful planning and consideration of the suggestions in this section are required to achieve the desired performance and reliability from the GMA 342/345. The guidance of FAA advisory circulars AC 43.13-1B and AC 43.13-2B, where applicable, may be found useful for making retro-fit installations that comply with FAA regulations.

2.2 Installation Materials

2.2.1 Unit Configurations

Table 2-1 Catalog Part Numbers

Model	Catalog Part Number	Unit Only Part Number
GMA 342 Unit Only	010-01319-10	011-03520-10
GMA 342 Standard Kit (includes items in Table 2-2)	010-01319-11	011-03520-10
GMA 345 Unit Only	010-01319-00	011-03520-00
GMA 345 Standard (includes items in Table 2-3)	010-01319-01	011-03520-00
GMA 345 3-COM Unit Only	010-01319-20	011-03520-20
GMA 345 3-COM Standard (includes items in Table 2-3)	010-01319-21	011-03520-20

2.3 Available Accessories

2.3.1 Standard Accessories

Table 2-2 Contents of GMA 342 Standard Installation Kit

Item	Part Number
Sub-Assy, Back Plate, GMA 342/345 (also used for GMA 240/340) (Table 2-4)	011-00678-00
Conn Kit, GMA 342/345 (also used for GMA 35/350) (Table 2-5)	011-02302-00
Sub -Assy, Audio Cables, 3.5 mm Right Angle	011-02412-00
SMP, Install Rack, GMA 342/345 (also used for GMA 240/340)	115-00262-00

Table 2-3 Contents of GMA 345 Standard Installation Kit

Item	Part Number
Sub-Assy, Back Plate, GMA 342/345 (also used for GMA 240/340) (Table 2-4)	011-00678-00
Conn Kit, GMA 342/345 (also used for GMA 35/350) (Table 2-5)	011-02302-00
SMP, Install Rack, GMA 342/345 (also used for GMA 240/340)	115-00262-00

Table 2-4 Contents of GMA 342/345 Back Plate Kit (011-00678-00, also used for GMA 240/340)

Item	Part Number	Quantity
Pre-bagged screws “D” (Table 2-6)	011-02650-03	1
Nut Cover, SMP	115-00261-00	1
Connector Plate Assembly, DCP	125-00040-00	1
Nut, Std, English, SS, #6-32	210-00036-07	1
Screw, 4-40 x 0.250, PHP, SS/P, w/NYL	211-60234-08	2

Table 2-5 Contents of GMA 342/345 Conn Kit (011-02302-00, also used for GMA 35/350)

Item	Part Number	Quantity
Backshell w/Hardware 44 pin	011-00950-02	2
Ground Adapter, Shell 1-3	011-01169-00	4
Screw 4-40 x 0.437, FLHP100, SS/P, Nylon	211-63234-11	4
Hi Density D-Sub Connector, Mil Crimp, 44 ckt	330-00185-44	2
Contact Pin, Mil Crimp, Size 22D	336-00021-00	94

Table 2-6 Contents of GMA 342/345 Pre-bagged Screws "D" (011-02650-03)

Item	Part Number	Quantity
Screw, 4-40 x 0.250, PHP, SS/P, w/NYL	211-60234-08	4
Cable Tie, 4.0"	231-10001-00	1

Table 2-7 Contents of GMA 342 Sub-Assy, Audio Cables, 3.5mm RA (011-02412-00)

Item	Part Number	Quantity
Cable Assembly, Audio, 3.5mm to 3.5mm, Right Angle, 4 Pole Plug	320-00571-00	1
Cable Assembly, Audio, 3.5mm to 2.5mm, Right Angle, 4 Pole Plug	320-00571-01	1

2.3.2 Additional Equipment Required

- Cables: The installer will fabricate and supply all system cables. Interconnect wiring diagrams are detailed in Appendix C.
- Hardware: #6-32 100° flat head screw (6 ea.) and #6-32 self-locking nut (6 ea.). Hardware required to mount the GMA 342/345 installation rack is not provided.
- Stereo headphone jacks (up to 6), microphone jacks (up to 6), 3.5mm stereo jacks (up to 2). Insulating type jacks or insulating washers should be used for all jacks to isolate them from aircraft chassis.
- Tool: 3/32" Allen for tightening the unit into the rack and backplate.
- Push/Pull (that can be manually reset) circuit breaker (5 Amp recommended).
- Tie Wraps or Lacing Cord
- Ring Terminals (for grounding) #8 size, Yellow, Blue, and Pink.
- Silicon Fusion Tape (GPN 249-00114-00) to wrap the cable bundle.
- Solder Sleeves for terminating the shields of the cable to the GMA 342/345 backshell. See 190-00313-09 for part numbers.
- Heat shrink tubing
- SD card needed for updating software in the GMA 342/345. Garmin recommends using a 4 GB Sandisk® SD card.

Insulating Washers for Headset and Microphone Jacks can be found at the following suppliers:

Dallas Avionics

100053 - Shoulder Washer

100054 - Flat Washer

Digi-key

SC1147-ND - Shoulder Washer

SC1146-ND - Flat Washer

Mouser

502-S-1029 – Shoulder Washer

502-S-1028 – Flat Washer

Newark

S1029 - Shoulder Washer

S1028 - Flat Washer

Switchcraft

S1029 – Shoulder Washer

S1028 – Flat Washer

2.4 Installation Considerations

The GMA 342/345 interfaces with various avionics equipment. Fabrication of a wiring harness is required. Sound mechanical and electrical methods and practices are required for installation of the GMA 342/345.

NOTE

3D audio is not available when using a mono headset or in aircraft wired with mono headset jacks. 3D audio (even if enabled), will not be available with mono audio headset jacks or mono headsets. It is recommended that stereo jacks and stereo headsets be used.

2.4.1 Auxiliary Inputs

For the GMA 345 3-COM unit, a single AUX button is used to select all 3 AUX inputs for simultaneous monitoring.

For the GMA 342 and 345 (2-COM version), two buttons (AUX1 and AUX2) are used to select/deselect the 3 AUX inputs. Pressing the AUX1 button selects/deselects the AUX 1 and AUX 3 receivers. Pressing the AUX2 button selects/deselects the AUX 2 receiver.

NOTE

It is important to consider what sources are wired to the AUX 1 and AUX 3 inputs because when AUX 1 is selected, both AUX 1 and AUX 3 receiver audio will be heard together (this note is not applicable to the GMA 345 3-COM unit).

2.4.2 Marker Beacon Antenna Installation

2.4.2.1 Location Considerations

The marker beacon antenna should be mounted on a flat surface on the underside of the aircraft body.

NOTE

Do not install the antenna inside the aircraft. Installing the antenna inside the aircraft limits the antenna reception and increases the antennas susceptibility to radiation from components inside the aircraft.

Mount the antenna so that there is a minimum of structure between it and the ground radio stations. Locate it as far away as possible from transmitter antennas.

2.4.2.2 Marker Beacon Antenna Mounting

Install the antenna according to the antenna manufacturer's instructions. If the antenna is being installed on a composite aircraft, ground planes must sometimes be added. Conductive wire mesh, radials or thin aluminum sheets embedded in the composite material provide the proper ground plane allowing the antenna pattern (gain) to be maximized for optimum performance.

2.4.2.3 Marker Beacon Antenna Cable

Use coaxial cable meeting the applicable aviation regulation for the marker beacon antenna. Any cable meeting specifications is acceptable for the installation. When routing antenna cables, observe the following precautions:

- All cable routing should be kept as short and as direct as possible
- Avoid sharp bends
- Avoid routing cables near power sources (e.g., 400 Hz generators, trim motors, etc.) or near power for fluorescent lighting
- Allow a 12 inch minimum separation between any other cables, including antenna cables (e.g ADF, COM, NAV, GS, MARKER)

2.4.2.4 Marker Beacon Antenna Cable Installation

This section provides guidance for terminating the coaxial cable into the D-Sub connector. See the system interconnect section for pin assignments.

NOTE

Use coaxial cable meeting the applicable aviation regulation for the marker beacon antenna. Route the cable to the D-Sub as described in Section 2.4.2.3.

When terminating the coaxial cable into the D-Sub observe the following guidance (refer to Figure 2-1):

- Keep the distance from the end of the exposed shield to D-Sub as short as possible.
- Ensure the distance from the beginning of the exposed shield to D-Sub is no more than 1.5 inches long.
- Terminate the center conductor by directly connecting it to the D-sub through a crimp pin without a pigtail.

Figure 2-1 below represents a suggested method for terminating the marker beacon coaxial cable using M17/128-RG400 terminated into a high density D-Sub connector. Refer to Table 2-8 for Crimp Tool, Pin, and Crimp Tool Insert part numbers.

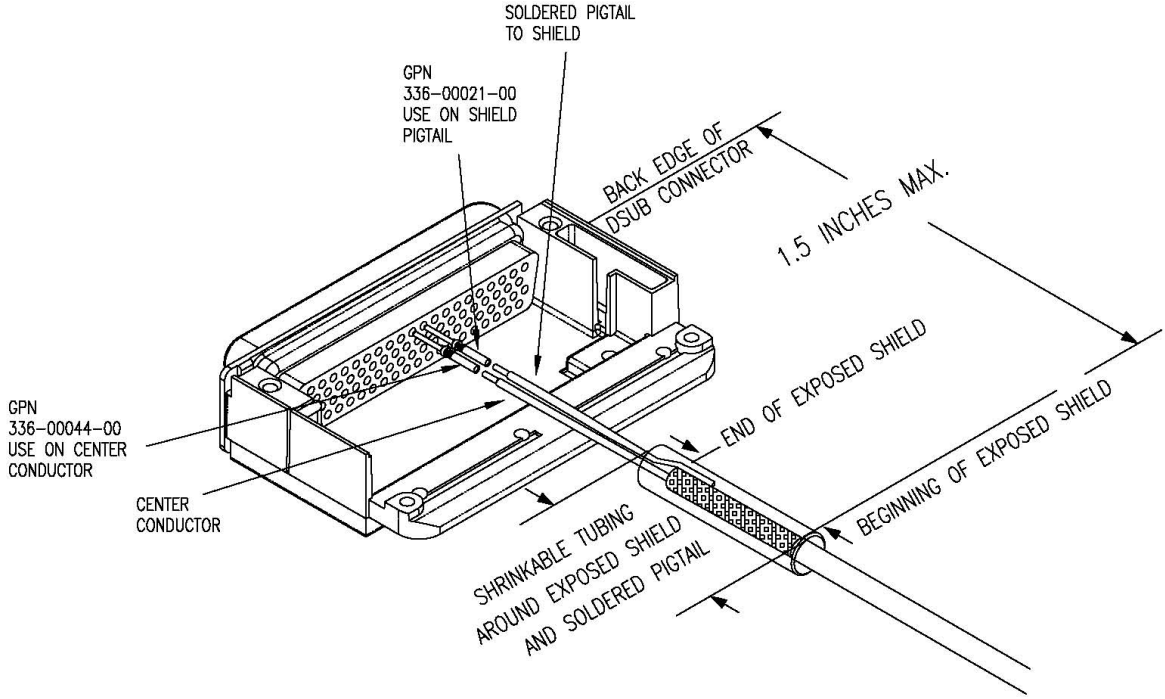

Figure 2-1 GMA 342/345 Marker Beacon Coaxial Cable D-Sub Termination

Table 2-8 Pin and Crimp Tool Part Numbers

CRIMP TOOL	PIN	CRIMP TOOL INSERT
DANIELS MANUFACTUING CORP DMC M22520/2-01 GAGE AFM8 CRIMPING TOOL	Garmin Part Number 336-00021-00	K42
	Garmin Part Number 336-00044-00	K774

2.4.3 Installation Approval Considerations for Pressurized Aircraft

Antenna and cable installations on pressurized cabin aircraft require FAA approved installation design and engineering substantiation data whenever such installations incorporate alteration (penetration) of the cabin pressure vessel by connector holes and/or mounting arrangements.

For needed engineering support pertaining to the design and approval of such pressurized aircraft antenna installations, it is recommended that the installer proceed according to any of the following listed alternatives:

1. Obtain approved antenna installation design data from the aircraft manufacturer.
2. Obtain an FAA approved Supplemental Type Certificate (STC) pertaining to and valid for the subject antenna installation.
3. Contact the FAA Aircraft Certification Office in the appropriate Region and request identification of FAA Designated Engineering Representatives (DERs) who are authorized to prepare and approve the required antenna installation engineering data.
4. Locate an appropriate consultant FAA DER, by reviewing the "FAA Consultant DER Directory", which can be found at the FAA "Designee and Delegation" web page.
5. Contact an aviation industry organization such as the Aircraft Electronics Association and request their assistance.

2.5 Cabling and Wiring

Cabling and Wiring

Refer to the interconnect examples in Appendix C for wire gauge guidance.

In some cases, a larger gauge wire such as AWG #18 or #20 may be needed for power connections. If using AWG #18 barrel contacts, ensure that no two contacts are mounted directly adjacent to each other. This minimizes the risk of contacts touching and shorting to adjacent pins and to ground.

Use wire and cable meeting the applicable aviation regulation. When routing wire and cable, observe the following precautions:

- Keep wire and cable as short and direct as possible
- Avoid sharp bends
- Avoid routing near power sources (e.g. 400 Hz generators, trim motors, etc) or near power of fluorescent lighting
- For Power and Ground use 2 individual wires for the units to the power source. Do not splice 2 wires to one at the unit for power and ground.

NOTE

Avoid installing the unit near heat sources. If this is not possible, ensure that additional cooling is provided. Allow adequate space for installation of cables and connectors. The installer will supply and fabricate all of the cables.

2.6 Electrical Bonding

Electrical equipment, supporting brackets, and racks should be electrically bonded to the aircraft's main structure. Refer to SAE ARP 1870 section 5 when aluminum surface preparation is required to achieve electrical bond. An equivalent OEM bonding procedure may also be substituted. The electrical bond should achieve direct current (DC) resistance less than or equal to 2.5 milliohms to local structure to where the equipment is mounted. Compliance should be verified by inspection using a calibrated milliohm meter.

2.7 Cooling Air

The GMA 342/345 does not have provisions for attaching cooling air, however the thermal characteristics of the installation should always be assessed. An undesirable thermal condition could be created due to the unit's own internal power dissipation combined with restricted ventilation, or due to heat generated by adjacent equipment. Limiting thermal build up, by means of fan or natural convection is always a good practice and recommended to increase the product life.

2.8 Configuration, and Adjustment Options

The GMA 342/345 has several configuration/adjustment options (see Section 2.8.6). These configuration/adjustments are as follows:

- Wired Telephone Volume
- Auxiliary 1 Volume
- Auxiliary 2 Volume
- Auxiliary 3 Volume
- Alert 1 Volume
- Alert 2 Volume
- Alert 3 Volume
- Alert 4 Volume
- Speaker Volume
- Marker Beacon Volume
- Passenger Address Voume
- Master Avionics Squelch (Section 2.8.1)
- Marker Beacon Low Sensitivity Offset (Section 2.8.2)
- Marker Beacon High Sensitivity Offset (Section 2.8.2)
- High Cockpit Noise Option (Section 2.8.3)
- Music In Isolation Option (Section 2.8.4)

2.8.1 Master Avionics Squelch (MASQ) Function

MASQ functions to prevent low level noise from being passed to the headset ear speakers, this is known as “squelching” or muting the audio. To “break” or “open” squelch means that enough audio signal is present that the signal is passed through and can be heard. Increasing this setting increases the signal level required to break/open squelch. If needed, adjust the MASQ SQ level so the audio background noise is muted.

2.8.2 Marker Beacon Sensitivity Offset

Sensitivity Offset From Calibration. At default offset level, marker sensitivity is calibrated to 200 uV for high sensitivity mode and 1000 uV for low sensitivity mode. Adjust up (right) if more sensitivity (earlier indication, longer lamp dwell over beacon, lower threshold voltage) is desired. Adjust down (left) if less sensitivity (later indication, shorter lamp dwell over beacon, higher threshold voltage) is desired. The low and high sensitivity settings are independent and do not affect each other.

2.8.3 High Cockpit Noise Option

Enable to help reduce intercom background noise in very high noise cockpit environments. Disabled by default.

2.8.4 Music In Isolation Option

Enable to allow pilot and copilot to hear selected music when PILOT or CREW isolation mode is active. Disabled by default.

2.8.5 DIP Switch Configuration

The DIP switches are used to select the configuration settings listed in Table 2-9, and are located on the right side of the unit next to the SD card slot as shown in Figure 2-2.

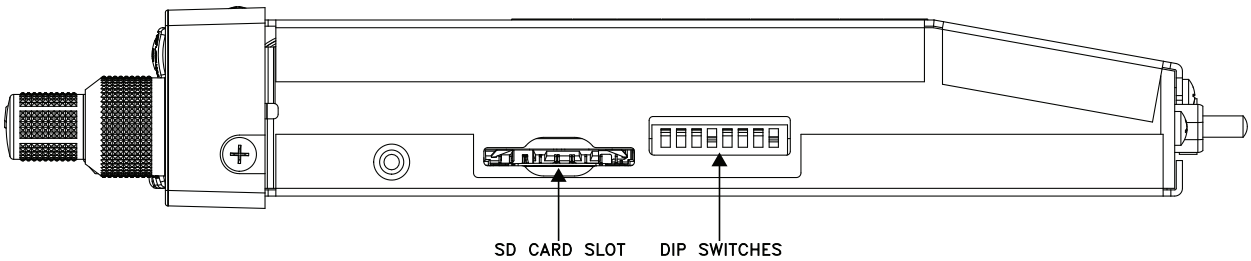

Figure 2-2 SD Card Slot and DIP Switch Locations

2.8.5.1 GMA 342/345 DIP Switch Configuration Settings

The GMA 342/345 DIP switch configuration settings are listed in Table 2-9. Per the label attached to the top cover of the unit, the down switch position is ON, the up switch position is OFF.

Table 2-9 DIP Switch Configuration Settings

Switch	Function	Description
1	ENABLED KEYED ICS	When set to ON, the intercom system (ICS) will only allow intercom MIC audio to be heard when the corresponding ICS KEY for the MIC position is pressed. When set to ON, auto squelch will NOT be active.
2	PILOT IN RIGHT SEAT	This setting is for intercom 3D audio. Normally the Pilot will be positioned to the left in the Copilot's headset, and the Copilot will be positioned to the right in the Pilot's headset. When set to ON, this setting reverses that so the Pilot is positioned to the right in the Copilot's headset, and the Copilot is positioned to the left in the Pilot's headset. For the GMA 345 3-COM unit, this also sets which knobs control Pilot volumes vs. Copilot/Passenger volumes.
3	MUTE ON COM TX	When set to ON, the monitored COM radio is muted during mic-selected COM transmission (mic-selected COM is still heard, but not the monitored COM radio).
4	PASSENGERS ALWAYS GET MUSIC 2	When set to ON, regardless of what the music source is set to (1, 2, Bluetooth transceiver on GMA 345, or 1, 2, Jack on GMA 342), regardless of what state of the MUSIC button is set to (ON or OFF), the passengers will always get MUSIC 2.
5	RESERVED	LEAVE SWITCH IN OFF POSTION
6	RESERVED	LEAVE SWITCH IN OFF POSTION
7	RESERVED	LEAVE SWITCH IN OFF POSTION
8	CONFIGURATION LOCKOUT	When set to ON, this prevents use of the GMA 342/345 config mode UI.

2.8.6 Front Panel Configuration

NOTE

The GMA 345 (2-COM version) is used as the example for this section. Some of the GMA 345 3-COM unit button text labels differ from the 2-COM version. Where this occurs, the 3-COM unit text label will be indicated in brackets following the 2-COM version button text label. For example: SPKR key [COM3 MIC for 3-COM unit].

Enter configuration mode by holding down the COM1 MIC and SPKR [COM3 MIC for 3-COM unit] buttons while turning the unit on.

When in configuration mode:

- Pressing the PLAY button will annunciate the current software/database product version, e.g. “system two dot zero zero”.
- Pressing the COM1 MIC key selects volume mode.
  - Press the COM1 MIC key until the desired volume is annunciated, e.g “auxiliary one volume”.
- Pressing the COM2 MIC key selects Master Avionics Squelch mode.
- Pressing the SPKR [COM3 MIC for 3-COM unit] key annunciates the current option, e.g. “Music During Isolation Enabled” or “Cockpit High Noise Disabled”.
  - Cockpit High Noise configuration applies more filtering to the intercom mic audio. In higher noise cockpits, this can improve voice intelligibility. In moderate to lower noise cockpits, the default filter usually provides better intelligibility.
  - Music During Isolation configuration changes the behavior of the PILOT and CREW isolation modes such that music is still heard by the pilot and copilot when they are isolated from the passengers.
- Pressing the TEL key selects Marker Beacon sensitivity offset mode. Press the TEL key until the desired Marker Beacon sensitivity mode is annunciated, e.g. "Marker Beacon Low Sensitivity".
- Pressing the PILOT key increases the selected setting as indicated by the LEDs on the Level Bar.
- Pressing the CREW key decreases the selected setting as indicated by the LEDs on the Level Bar.
- When adjusting Options in configuration mode, the PILOT and CREW keys are used to indicate the current state and change the state.
  - If the option is enabled, the PILOT key is lit solid and the CREW key flashes (indicating that the CREW key can be pushed to disable the option).
  - If the option is disabled, the CREW key is lit solid and the PILOT key flashes (indicating that the PILOT key can be pushed to enable the option).
  - The Level Bar is not used when in the options mode.
- The LEDs in the Level Bar (Figure 2-3) light to indicate an increase/decrease in the selected setting.
- Pressing COM1 and MKR buttons simultaneously resets the configuration and operating state back to factory defaults.

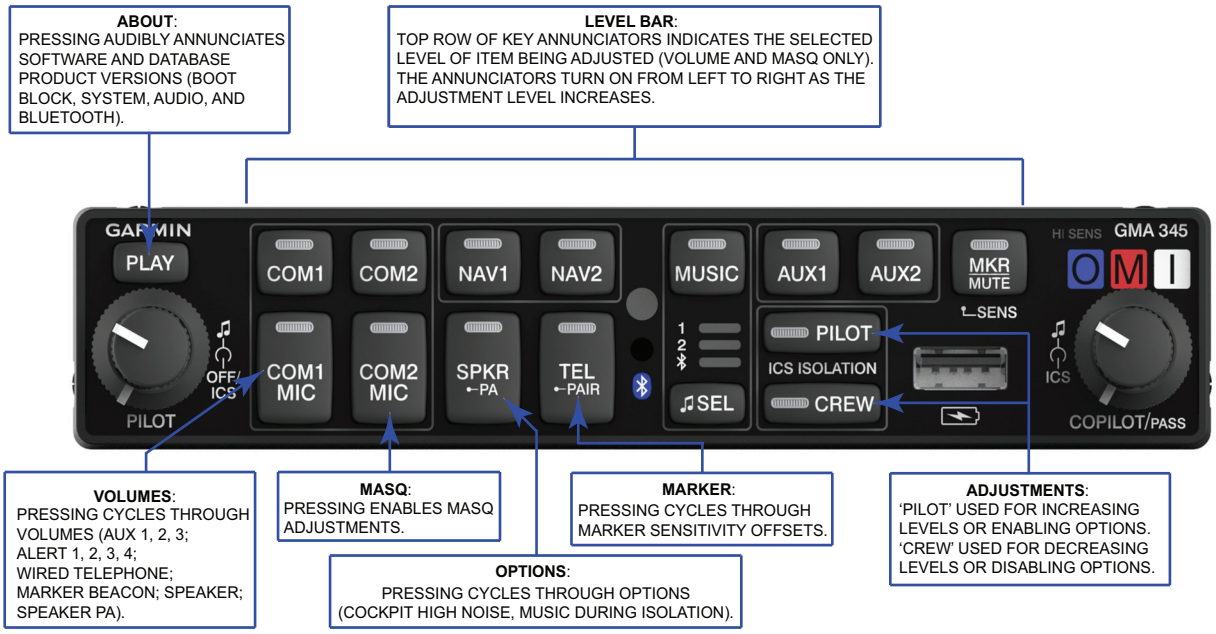

Figure 2-3 Front Panel Configuration

2.8.7 Hardwired Configuration Options

The configuration options in Table 2-10 are available by wiring the inputs to a pushbutton to ground (see Figure C-2 and Figure C-3).

Table 2-10 Hardwire Configuration Options

Connector	Pin	Description	Type	Function
J3401	16	PILOT ICS KEY*	Input	If DIP switch 1 is on, this active low input, when grounded, will allow microphone audio to the intercom from Pilot MIC.
J3401	24	COM ACTIVE OUT*	Output	This output is active when Receiving selected COM audio or when transmitting on the MIC selected COM. This output can be used to connect to other devices to inhibit other devices from playing audio into the GMA 342/345 while there is COM activity.
J3402	13	PASSENGER ICS KEY*	Input	If DIP switch 1 is on, this active low input, when grounded, will allow microphone audio to the intercom from Passenger MIC.
J3402	20	COM SWAP*	Input	When grounded the MIC selected COM will swap. For the GMA 345 3-COM unit, this cycle includes selection of COM 3 MIC (1, 2, 3, 1, 2, 3, ...).
J3402	22	PLAY KEY*	Input	When grounded the last voice recorded message will play. While playing, if grounded again, the previous message will play.
J3402	30	COPILOT ICS KEY*	Input	If DIP switch 1 is on, this active low input, when grounded, will allow microphone audio to the intercom from Copilot MIC.
J3402	19	PA MODE SELECTED*	Output	This output is active when the GMA 342/345 is in PA mode.
J3402	12	PA MUTE OUT*	Output	This output is active when the GMA 342/345 is in PA mode, and the Pilot or Copilot PTT is active.

*Active Low

2.9 Updating Software

Updating software is performed using an SD card. Garmin recommends using a 4GB Sandisk® SD Card.

2.9.1 Checking Software Version

The GMA 342/345 comes pre-loaded with system software. However, if the software is out of date, it is recommended that current software be loaded from an SD card into the GMA 342/345.

The current version of software can be retrieved in the configuration operating mode. See Section 2.8.6 for instructions.

2.9.2 Creating a Software Loader SD Card

The software update mode allows the installer to load unit software using an SD software loader card.

NOTE

The application to create a loader card requires Windows 2000, XP, Vista, Windows 7, or Windows 10. There is no Mac support at this time.

6. Go to the Dealer Resource Center at dealers.garmin.com.
7. Download the GMA 342/345 software to your PC.
8. Ensure that an SD card (Garmin recommends a Sandisk® brand 4GB SD card) is connected to the PC in the SD card slot.
9. Run the executable file that was downloaded and follow the prompts on the screen to create the software loader card.
10. After the card has been created, select finish to complete the process.
11. Remove the card from the slot. The loader card is now ready to use.

2.9.3 Loading Software to the GMA 342/345

1. Remove the unit from the rack using a 3/32” Allen tool.
2. The SD card slot is on the right side of the unit next to the DIP switches (see Figure 2-2). Insert the SD card with pins facing down (toward the bottom of the unit).
3. Install the unit back into the rack using a 3/32” Allen tool.
4. Press and hold the following two keys while turning the unit on:
   a) For GMA 342 and 345 (2-COM version): COM1 MIC key and TEL key.
   b) For GMA 345 3-COM unit: COM1 MIC key and COM3 MIC key.
5. The GMA 342/345 will begin checking the SD card for updated software.
   a) Do not turn the GMA 342/345 off or remove power during the update process.
   b) The top row of buttons, from left to right, will indicate the progress of the update process.
   c) If a problem is encountered during the update process, all buttons on the top row will flash at a 1 Hz rate.

6. If a problem is encountered during the update process, follow the below steps for possible solutions.
   a) Use the Pilot Knob to power cycle the GMA 342/345, then perform the process again.
   b) Attempt to re-download the GMA 342/345 software to the PC, recreating the loader SD card, and perform the process again.
   c) Recreate the loader card using the recommended Sandisk® brand 4GB SD card, and attempt the update process again.
   d) If still having difficulty performing the update, contact Garmin Aviation Technical support.
7. Once the update process is finished the GMA 342/345 will automatically reboot back into normal operating mode.
8. The update card does not need to be removed after the update process and can be left in the GMA 342/345 at the installer's discretion.

Once the unit has been updated, verify the correct software version is installed (see Section 2.8.6 for instructions). For the GMA 345 only, if a Bluetooth firmware update is included with the software update, the Bluetooth firmware will be updated automatically after the GMA 345 reboots. While a Bluetooth firmware update is being performed in the GMA 345, the Bluetooth annunciator will blink in an ON - ON - OFF pattern for several minutes. When the Bluetooth software update is completed, the Bluetooth functions will return to normal operation.

2.10 Electrical Noise

Because the audio panel is a point in the aircraft where signals from many pieces of equipment are brought together, care must be taken to minimize effects from coupled interference and ground loops.

Coupled interference can sneak into audio system interconnecting cables when they are routed near large AC electric fields, AC voltage sources, and pulse equipment (strobes, spark plugs, magnetos, EL displays, CRTs, etc). Interference can also couple into audio system interconnecting cables by magnetic induction when they are routed near large AC current-carrying conductors or switched DC equipment (heaters, solenoids, fans, autopilot servos, etc).

Ground loops are created when there is more than one path in which return currents can flow, or when signal returns share the same path as large currents from other equipment. These large currents create differences in ground potential between the various equipment operating in the aircraft. These differences in potential can produce an additive effect at an audio panel signal input.

The audio panel may "see" the desired input signal plus an unwanted component injected by ground differentials, a common cause of alternator-related noise. This is the main reason why all audio jacks should be isolated from ground. Terminating audio shields just at one end eliminates another potential ground loop injection point.

Single-point grounding cannot be overstressed for the various avionics producing and processing audio signals. Single-point, in this context, means that the various pieces of equipment share a single common ground connection back to the airframe. Good aircraft electrical/charging system ground bonding is also important.

The wiring diagrams and accompanying notes in this manual should be followed closely to minimize noise effects.

2.11 Mounting Requirements

The GMA 342/345 mounting surface must be capable of providing structural support and electrical bond to the aircraft to minimize radiated EMI and provide protection from High-Intensity Radiation Fields (HIRF).

The GMA 342/345 is mounted using a GMA unit rack (Figure 2-4). See Section 3.6 for installation instructions.

NOTE

Rear support is recommended to ensure a sturdy mount.

CAUTION

The top cover of the unit has a connector number (1 and 2) stamped into it and centered in front of each connector. The 011-00678-00 backplate also has a stamped number on it. To prevent damage to the unit, verify the connectors are positioned correctly (connector 1 is connected in position 1) for the number 1 and number 2 locations. The stamped number 1 refers to J3401, and 2 refers to J3402.

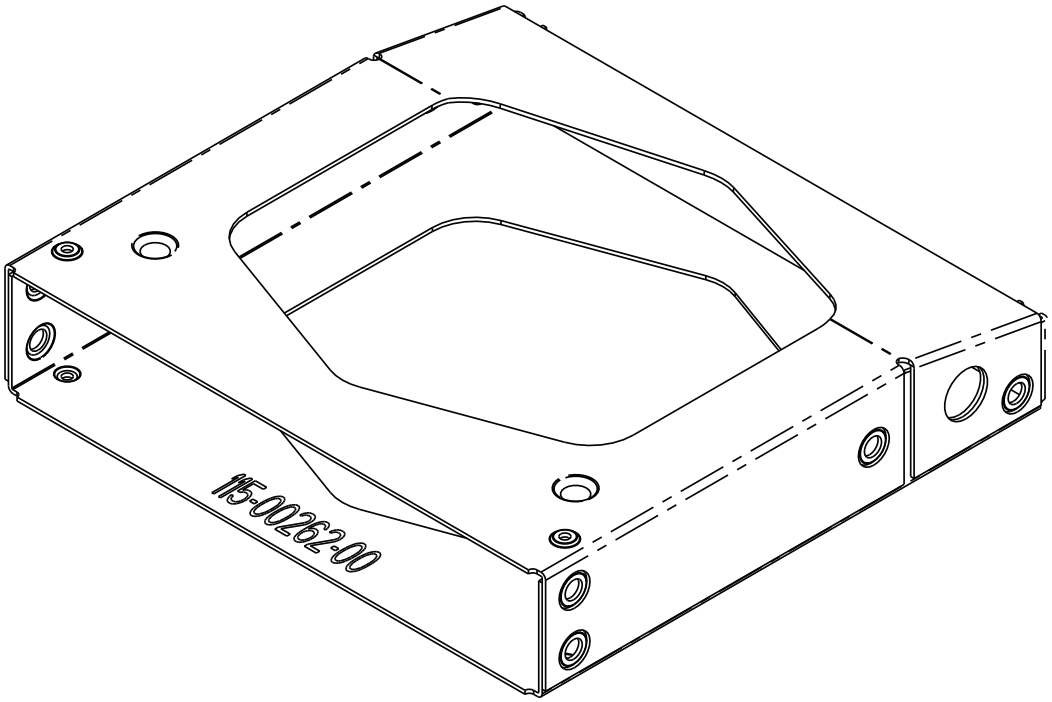

Figure 2-4 GMA Unit Rack (115-00262-00)

3 INSTALLATION PROCEDURE

3.1 Unpacking Unit

Carefully unpack the equipment and make a visual inspection of the unit for evidence of damage incurred during shipment. If the unit is damaged, notify the carrier and file a claim. To justify a claim, save the original shipping container and all packing materials. Do not return the unit to Garmin until the carrier has authorized the claim.

Retain the original shipping containers for storage. If the original containers are not available, a separate cardboard container should be prepared that is large enough to accommodate sufficient packing material to prevent movement.

3.2 Electrical Connections

All electrical connections to the GMA 342/345 are made through two 44-pin D-subminiature connectors (see Figure 3-1). Section 4 defines the electrical characteristics of all input and output signals. Required connector and associated hardware are supplied in the connector kits. Refer to Section 2.3 for the GMA 342/345 standard kit part numbers that contain the necessary hardware. See Appendix C for interconnect wiring diagrams.

CAUTION

Check wiring connections for errors before inserting the GMA 342/345 into the rack. Incorrect wiring could cause internal component damage.

Table 3-1 Pin Contact Part Numbers

Manufacturer	44 pin D-Subminiature Connectors (P3401, P3402)	
	18-20 AWG (Power and Ground Only)	22-28 AWG
Garmin P/N	336-00044-00*	336-00021-00
Military P/N	N/A	M39029/58-360

*Used for 18 AWG wire, is not included in the GMA 342/345 installation kits, and is not needed to install a GMA 342/345. GPN 336-00021-00 is used for 22 AWG wire and is included in the GMA 342/345 installation kits. Use the 336-00044-00 if installing 18 AWG wire for Power and Ground.

Table 3-2 Recommended Crimp Tools

Manufacturer	Hand Crimping Tool	18-20 AWG		22-28 AWG	
		Positioner	Insertion/ Extraction Tool (Note 2)	Positioner	Insertion/ Extraction Tool
Military P/N	M22520/2-01	N/A	M81969/1-04	M22520/2-09	M81969/1-04
Positronic	9507	9502-11	M81969/1-04	9502-3	M81969/1-04
AMP	601966-1	N/A	91067-1	601966-6	91067-1
Daniels	AFM8	K774	M81969/1-04	K42	M81969/1-04
Astro	615717	N/A	M81969/1-04	615725	M81969/1-04

NOTE

1. Non-Garmin part numbers shown are not maintained by Garmin and consequently are subject to change without notice.
2. Extracting #18 and #20 contacts requires that the expanded wire barrel be cut off from the contact. It may also be necessary to push the pin out from the face of the connector when using an extractor due to the absence of the wire. A new contact must be used when reassembling the connector.

3.3 Antenna Installation

Install the antenna according to the antenna manufacturer's instructions.

3.3.1 Antenna Cable Connectors

The antenna cable requires a BNC plug connector. Follow BNC connector manufacturer instructions for assembly of the BNC connector.

3.4 Shield Block Backshell Installation Instructions

3.4.1 Backshell Installation Parts

The GMA 342/345 connector kit includes two Garmin backshell assemblies. Garmin's backshell connectors give the installer the ability to quickly and easily terminate shield grounds at the backshell housing using the Shield Block. To assemble the backshell connectors and grounding system, refer to instructions provided in the Shield Block Installation Instructions (190-00313-09).

3.5 Backshell Assembly

The GMA 342/345 connector kit includes two Garmin backshell assemblies. Garmin's backshell connectors give the installer the ability to quickly and easily terminate shield grounds at the backshell housing using the Shield Block. To assemble the backshell connectors and grounding system, refer to instructions provided in the refer to instructions provided in the Shield Block Installation Instructions (190-00313-09).

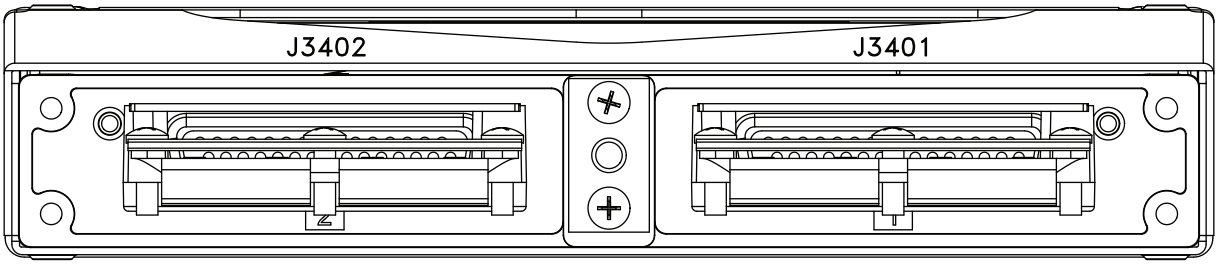

Figure 3-1 Rear View of Rack and Connectors

3.6 Unit Installation

CAUTION

Do not use excessive force when inserting the GMA 342/345 into the rack. This may damage the connectors, unit, and/or rack. If heavy resistance is felt during installation, stop! Remove the GMA 342/345 and identify the source of resistance.

3.6.1 GMA 342/345 Installation:

For final installation and assembly, refer to the outline and installation drawings Figure B-1 and Figure B-2

1. Assemble the backshell as described in Section 3.5.
2. Connect both backshells to the rear plate using the screws provided in the connector kit (Figure B-2).
3. Mount the GMA 342/345 to the GMA rack as shown on the installation drawing.
4. Assemble the rear plate into the GMA 342/345 unit rack.
5. Insert the GMA 342/345 into the rack, noting proper orientation as shown on the installation drawing.
6. Lock the GMA 342/345 in place using a 3/32" Allen tool.

3.7 Post Installation Checkout

CAUTION

Check wiring connections for errors before inserting the GMA 342/345 into the rack. Incorrect wiring could cause internal component damage.

An in-aircraft checkout may be performed in the aircraft on the ramp with known good microphone, headset, and avionics receivers.

3.7.1 Failsafe Operation Check

1. Remove power to the unit by pulling the GMA 342/345 breaker.
2. Connect a mono headset to the pilot's headset output jack and pilot's mic jack.

NOTE

Use of a true mono headset is required for this test to ensure proper wiring even if a stereo jack is provided in the installation. Wiring left channel (tip contact) and right channel (ring contact) backwards will cause failsafe mode not to function with mono headsets. Use of a true mono headset is required for this test (not a stereo headset with a mono/stereo switch because headset manufactures differ on how they accomplish this switching). This will guarantee the condition of the right channel (ring terminal) being shorted to the return (sleeve terminal) by the mono headset's plug. This short occurs because of the physical design of the headset plug contacts and is an inevitable consequence of plugging a mono headset into a stereo jack. During power-on operation, this short will not damage the audio panel.

3. Verify that COM1 transceiver can be heard in the pilot's headset.
4. Verify that COM1 can key and transmit the pilot's mic audio by verifying received sidetone or checking reception of the transmission with another radio tuned to receive this transmission (verify Pilot PTT and mic operation is delivered to this transceiver).
5. Apply unit power by restoring the audio breaker to the normal operating position

3.7.2 Transceiver Operational Check

1. Perform a ramp test radio check by exercising the installed transceivers, microphone, microphone key, and audio over the headphone.
2. Verify that communications are loud and clear and PTT operation is correct.

3.7.3 Aircraft Receivers Check

1. Select the audio source corresponding to each installed avionics unit and check for audio over the headsets.
2. Verify each installed unswitched (alert) source can be heard when the source is instructed to play a simulated alert/message.

NOTE

For the GMA 342 and 345 (2-COM version) unit AUX inputs, pressing the AUX1 button selects/deselects the AUX 1 and the AUX 3 receiver. Pressing the AUX2 button selects/deselects the AUX 2 receiver.

NOTE

For the GMA 345 3-COM unit, a single AUX button is used to select all 3 AUX inputs for simultaneous monitoring.

3.7.4 Music System Check

1. Set GMA 342/345 to ALL mode with Pilot and Crew button off.
2. Connect a stereo audio source to MUSIC 1. Verify that stereo audio is heard over all headset positions when MUSIC 1 is selected as the music source and the MUSIC LED is on. Verify that music volume adjustment is working properly for Pilot, Copilot, and Passengers (if passenger headsets are wired).
3. Connect a stereo music source to MUSIC 2. Verify that stereo audio is heard when MUSIC 2 is selected as the music source and MUSIC LED is on.

3.7.5 Bluetooth Music System Check (GMA 345 only)

Use the following steps to Pair and wirelessly connect a Bluetooth equipped phone or tablet to the GMA 345. Pairing mode allows a new device to discover and create a connection to the GMA 345. Additionally, pairing mode is used to forcefully disconnect a device currently connected to the GMA 345.

NOTE

The Bluetooth annunciation is illuminated only when a Bluetooth device is connected.

1. Press and hold the TEL (PAIR) Key for one second to enter pairing mode. The Bluetooth annunciator flashes to indicate the GMA 345 is in pairing mode and “Pairing Enabled” audio is played. Once the Bluetooth annunciator flashes, the GMA is discoverable for two minutes, or until a device is paired or connected. While discoverable, a Bluetooth enabled device (e.g., cellphone or tablet) can find and pair with the GMA. Refer to the device’s instruction manual for information on how to pair and connect to a new Bluetooth device. Once paired and connected, the Bluetooth annunciator on the GMA stops flashing and remains lit as long as the Bluetooth connection is active. The GMA remembers the last 10 paired devices. When the paired devices list is full and a new device is paired, the least recently connected device is removed from the paired device list.
2. Play music on a device using the Bluetooth connection and adjust the device volume near maximum.
3. With the MUSIC button on and the Bluetooth music system selected, verify music is heard in the connected headsets and that the music volume on the GMA 345 adjusts the volume in the headset.
4. Disable radio and ICS muting by pressing and holding the AUX2 key.

NOTE

To ensure the music audio is not being muted by ICS or by COM audio, disable radio and ICS muting. Also, deselect the PILOT or CREW buttons so that there is no ICS Isolation.

3.7.6 Speaker Check

1. If a speaker was installed, select SPKR and receive COM audio on the selected COM. When the speaker is selected, the selected Receivers on the GMA 342/345 (COM, NAV, AUX) should be heard from the speaker.
2. Initiate PA (Passenger Address) mode and verify that from both the pilot and copilot position, the crew position that is pressing PTT has the respective mic audio delivered to the speaker clearly.

NOTE

If a loud squeal is heard while testing the PA, it is likely caused by acoustic feedback between the speaker and the mic. Physically separating the speaker and microphone should resolve this issue. If the speaker and mic cannot be placed sufficiently apart, a lower volume configuration should be used. Some installations may not have sufficient distance between the speaker and crew seat positions for reliable PA to speaker operation. In these conditions, the "PA to speaker" volume can be set very low and PA audio will still be delivered to the headsets.

CAUTION

Be sure to check all aircraft control movements before flight is attempted to ensure that the wiring harness does not touch any moving part.

3.7.7 Marker Beacon Operation (if installed)

1. With a marker signal generator/transmitter test set, generate Marker Tones.
2. From the pilot headset position, verify that marker audio can be heard when selected.
3. If the system includes integrated lamp annunciation and/or if external lamps are installed, verify that each marker tone illuminates the proper lamp.

NOTE

The Marker Lamps will operate even if the marker audio is not selected.
Outer Marker – Blue Lamp – 400 Hz (AM or received audio tone)
Middle Marker – Amber Lamp – 1300 Hz (AM or received audio tone)
Inner Marker – White Lamp – 3000 Hz (AM or received audio tone)

NOTE

To adjust the Marker beacon volume, put the unit into configuration mode as shown in Section 2.8.6, cycling to the Marker Beacon volume, then adjusting with the crew and pilot buttons as described in Section 2.8.6.

4. Verify that during HI SENS operation, the RF threshold is more sensitive (marker audio/indication occurs as a lower RF power) when the GMA 342/345 is in HI SENSE.

3.7.8 Other Optionally Installed I/O

Verify any other installed/configured inputs and outputs operate properly. Possible examples include: ICS keys, Play key, PA Mute output, PA Mode Selected output, COM Active output, and Middle Marker Sense output.

This completes the in-aircraft post installation checkout. Perform a flight test after installing the unit to ensure satisfactory performance of the audio functions.

3.8 Continued Airworthiness

Other than for regulatory checks, maintenance of the GMA 342/345 is "on condition" only. Periodic maintenance of the GMA 342/345 is not required.

3.9 Diagnostics Information

The GMA 342/345 is capable of displaying diagnostics information while in normal mode of operation. To show the diagnostics information press the PLAY button for five seconds. While still holding the PLAY button, all button annunciators will turn off except for those associated with certain diagnostic states. All button annunciators are off if no diagnostic information is available. The image below depicts which button annunciators are associated with which diagnostic states.

NOTE

The GMA 345 (2-COM version) is used as the example for this section. Some of the GMA 345 3-COM unit button text labels differ from the 2-COM version.

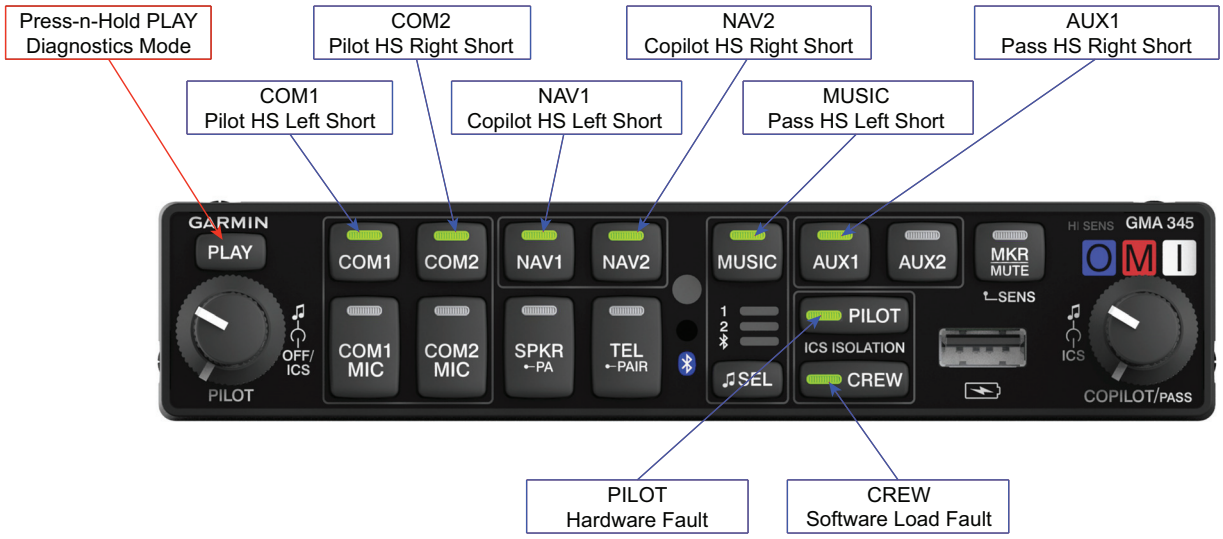

Figure 3-2 Diagnostics Mode (2-COM version shown)

- A Headset Short indication means that the unit has detected the associated headset wire is shorted to ground or to another headset channel. No headset short should be detected if the headset jack is wired for a stereo jack, and the headset is a stereo headset. A headset short may be detected for a mono headset.
- A Hardware Fault indication means the unit has detected an internal unrecoverable fault. Contact Garmin Aviation Customer support for assistance.
- A Software Load Fault indication means the previous software update didn't complete successfully. Retry loading software from the loader card to resolve this fault.

3.10 Disabling Bluetooth Connectivity (GMA 345 only)

To aid in troubleshooting the GMA 345, Bluetooth connectivity can be disabled. To disable Bluetooth connectivity:

1. Press and hold the TEL key for 5 seconds.
2. An audio clip will be heard in the headset that says “Bluetooth Disabled”.
3. To re-enable Bluetooth connectivity without power cycling, press and hold the TEL key for 5 seconds.
4. An audio clip will be heard in the headset that says “Bluetooth Enabled”.

NOTE

Once disabled, the GMA 345 Bluetooth connectivity does not remain disabled after power cycling. The GMA 345 Bluetooth connectivity is always enabled following a power cycle.

4 SYSTEM INTERCONNECTS

4.1 Connector Description

The GMA 342/345 has two 44-pin connectors located at the rear of the unit designated J3401 and J3402 which are oriented as shown in Figure 4-1. The GMA 342/345 is installed into a rack with shield block backshells.

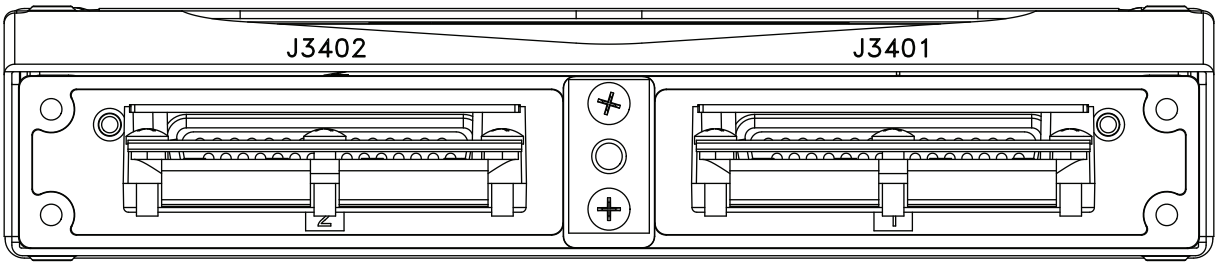

Figure 4-1 Rear View of Backplate and Connectors

4.2 Pin List

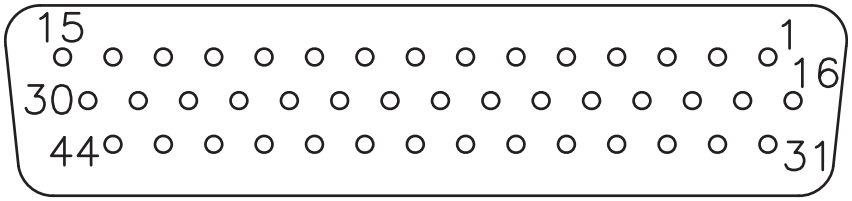

Figure 4-2 Rear Connectors J3401 & J3402, Viewed from Back of Unit

J3401 and J3402 pins are configured as shown in Figure 4-2. J3401 and J3402 pin assignments are given in Table 4-1, Table 4-2, and Appendix C.

Following the Table 4-1 & Table 4-2, additional tables group pin connections by function.

An asterisk (*) following a signal name denotes that the signal is active low logic. Active low inputs are connected to ground to activate. Active low outputs sink current to ground when active.

4.2.1 J3401 Connector

Table 4-1 J3401 Pin Assignments

Pin	Pin Name	I/O
1	MARKER ANTENNA HI	IN
2	MARKER ANTENNA LO	--
3	WIRED TEL AUDIO IN (GMA 342/345)	IN
	COM 3 AUDIO IN (GMA 345 3-COM unit only)	
4	WIRED TEL AUDIO LO (GMA 342/345)	--
	COM 3 AUDIO LO (GMA 345 3-COM unit only)	

*Denotes Active Low (Inputs: ground to activate; Outputs: grounded when active)

Table 4-1 J3401 Pin Assignments

Pin	Pin Name	I/O
5	WIRED TEL MIC OUT (GMA 342/345)	OUT
	COM 3 MIC OUT (GMA 345 3-COM unit only)	
6	RESERVED (GMA 342/345)	OUT
	COM 3 MIC KEY* OUT (GMA 345 3-COM unit only)	
7	RCVR 4 AUDIO IN HI (AUX 2)	IN
8	RCVR 4 AUDIO IN LO (AUX 2)	--
9	COM 1 AUDIO IN HI	IN
10	COM 1 AUDIO LO	--
11	COM 1 MIC AUDIO OUT HI	OUT
12	COM 1 MIC KEY* OUT	OUT
13	COM 2 AUDIO IN HI	IN
14	COM 2 AUDIO LO	--
15	COM 2 MIC AUDIO OUT HI	OUT
16	PILOT ICS KEY*	IN
17	NAV 1 AUDIO IN HI	IN
18	NAV 1 AUDIO IN LO	--
19	NAV 2 AUDIO IN HI	IN
20	NAV 2 AUDIO IN LO	--
21	RCVR 3 AUDIO IN HI (AUX 1)	IN
22	RCVR 3 AUDIO IN LO (AUX 1)	--
23	RCVR 5 AUDIO IN HI (AUX 3)	IN
24	COM ACTIVE* OUT	OUT
25	RESERVED (GMA 342/345)	--
	WIRED TEL AUDIO IN HI (GMA 345 3-COM unit only)	IN
26	RESERVED (GMA 342/345)	--
	WIRED TEL AUDIO IN LO (GMA 345 3-COM unit only)	IN
27	RESERVED (GMA 342/345)	--
	WIRED TEL MIC OUT HI (GMA 345 3-COM unit only)	OUT
28	RESERVED (GMA 342/345)	--
	WIRED TEL MIC OUT LO (GMA 345 3-COM unit only)	OUT
29	ALERT 3 AUDIO IN HI	IN
30	COM 2 MIC KEY* OUT	OUT
31	ALERT 1 AUDIO IN HI	IN
32	ALERT 1 AUDIO IN LO	--
33	PILOT MIC AUDIO IN HI	IN
34	PILOT MIC KEY* IN	IN
35	PILOT MIC AUDIO IN LO	--

*Denotes Active Low (Inputs: ground to activate; Outputs: grounded when active)

Table 4-1 J3401 Pin Assignments

Pin	Pin Name	I/O
36	INNER MARKER LAMP OUT	OUT
37	OUTER MARKER LAMP OUT	OUT
38	MIDDLE MARKER LAMP OUT	OUT
39	MIDDLE MARKER SENSE OUT	OUT
40	PASS HEADSET AUDIO OUT LEFT	OUT
41	PASS HEADSET AUDIO OUT RIGHT	OUT
42	PASS HEADSET AUDIO OUT LO	--
43	ALERT 3, 4, AUX 3 AUDIO IN LO	--
44	ALERT 4 AUDIO IN HI	IN

*Denotes Active Low (Inputs: ground to activate; Outputs: grounded when active)

4.2.2 J3402 Connector

Table 4-2 J3402 Pin Assignments

Pin	Pin Name	I/O
1	PILOT HEADSET AUDIO OUT LO	--
2	COPILOT HEADSET AUDIO OUT LO	--
3	COPILOT HEADSET AUDIO OUT LEFT	OUT
4	COPILOT HEADSET AUDIO OUT RIGHT	OUT
5	LIGHTING BUS 14V LO/28V LO	--
6	LIGHTING BUS 14V HI/28V LO	IN
7	LIGHTING BUS 14V HI/28V HI	IN
8	AIRCRAFT POWER	IN
9	AIRCRAFT POWER	IN
10	POWER GROUND	--
11	POWER GROUND	--
12	PA MUTE* OUT	OUT
13	PASSENGER ICS KEY*	IN
14	ALERT 2 LO, FAILSAFE AUDIO IN LO	--
15	ALERT 2 AUDIO IN HI	IN
16	PILOT HEADSET AUDIO OUT LEFT	OUT
17	RESERVED	--
18	RESERVED	--
19	PA MODE SELECTED*	OUT
20	COM SWAP*	IN
21	GROUND	--
22	PLAY KEY*	IN

*Denotes Active Low (Inputs: ground to activate; Outputs: grounded when active)

Table 4-2 J3402 Pin Assignments

Pin	Pin Name	I/O
23	MUSIC 1 IN LEFT	IN
24	MUSIC 1 IN RIGHT	IN
25	MUSIC 1 IN LO	--
26	MUSIC 2 IN LEFT	IN
27	MUSIC 2 IN RIGHT	IN
28	MUSIC 2 IN LO	--
29	FAILSAFE WARN AUDIO IN HI	IN
30	COPILOT ICS KEY*	IN
31	PILOT HEADSET AUDIO OUT RIGHT	OUT
32	COPILOT MIC AUDIO IN HI	IN
33	COPILOT MIC KEY* IN	IN
34	COPILOT MIC AUDIO IN LO	--
35	PASS 1 MIC AUDIO IN HI	IN
36	PASS 1 MIC AUDIO IN LO	--
37	PASS 2 MIC AUDIO IN HI	IN
38	PASS 2 MIC AUDIO IN LO	--
39	PASS 3 MIC AUDIO IN HI	IN
40	PASS 3 MIC AUDIO IN LO	--
41	PASS 4 MIC AUDIO IN HI	IN
42	PASS 4 MIC AUDIO IN LO	--
43	SPEAKER AUDIO OUT LO	--
44	SPEAKER AUDIO OUT HI	OUT

*Denotes Active Low (Inputs: ground to activate; Outputs: grounded when active)

4.3 Aircraft Power

The GMA 342/345 has four pins for aircraft power bus inputs. Use one wire for each of the pins connecting to the aircraft power and ground. Do not splice the power and ground pins at the unit and use only one wire to aircraft power and ground.

Table 4-3 Aircraft Power

Pin	Connector	Pin Name	I/O
8	J3402	AIRCRAFT POWER	IN
9	J3402	AIRCRAFT POWER	IN
10	J3402	POWER GROUND	--
11	J3402	POWER GROUND	--

4.4 Lighting Bus

The GMA 342/345 can be configured to track a 14 or 28 Vdc lighting bus using these inputs. Refer to Appendix C for lighting interconnections.

Backlighting refers only to the lighting of the text labels on the front panel and is controlled by the inputs in Table 4-4. The brightness of the LED annunciators that illuminate each key when selected is controlled by a photocell that operates independently of the backlight input.

NOTE

If the lighting bus inputs are not connected, the backlighting will use the photocell.

Table 4-4 Lighting Bus

Pin	Connector	Pin Name	I/O
5	J3402	LIGHTING BUS 14V LO/28V LO	--
6	J3402	LIGHTING BUS 14V HI/28V LO	IN
7	J3402	LIGHTING BUS 14V HI/28V HI	IN

4.5 Audio Inputs/Outputs and Mic Keys

4.5.1 Mic Audio Inputs and Mic Keys

Table 4-5 Mic Audio Inputs and Mic Keys

Pin	Connector	Pin Name	Description	I/O
34	J3401	PILOT MIC KEY* IN	Enables respective MIC audio into the selected transceiver unit	IN
33	J3402	COPILOT MIC KEY* IN		IN
33	J3401	PILOT MIC AUDIO IN HI	Pilot Mic audio input and ground reference	IN
35	J3401	PILOT MIC AUDIO IN LO		--
32	J3402	COPILOT MIC AUDIO IN HI	Copilot Mic audio input and ground reference	IN
34	J3402	COPILOT MIC AUDIO IN LO		--
35	J3402	PASS 1 MIC AUDIO IN HI	Passenger 1 Mic audio and ground reference	IN
36	J3402	PASS 1 MIC AUDIO IN LO		--
37	J3402	PASS 2 MIC AUDIO IN HI	Passenger 2 Mic audio and ground reference	IN
38	J3402	PASS 2 MIC AUDIO IN LO		--
39	J3402	PASS 3 MIC AUDIO IN HI	Passenger 3 Mic audio and ground reference	IN
40	J3402	PASS 3 MIC AUDIO IN LO		--
41	J3402	PASS 4 MIC AUDIO IN HI	Passenger 4 Mic audio and ground reference	IN
42	J3402	PASS 4 MIC AUDIO IN LO		--

*Denotes Active Low (Ground to activate)

4.5.2 COM Audio and Mic Keys

Table 4-6 COM Audio and Mic Keys (GMA 342/345 2-COM unit only)

Pin	Connector	Pin Name	Description	I/O
12	J3401	COM 1 MIC KEY* OUT	Enables transmission on the respective transceiver unit	OUT
30	J3401	COM 2 MIC KEY* OUT		OUT
9	J3401	COM 1 AUDIO IN HI	COM 1 Audio Input	IN
11	J3401	COM 1 MIC AUDIO OUT HI	COM 1 Audio Output	OUT
10	J3401	COM 1 AUDIO LO	Ground Reference for COM 1	--
13	J3401	COM 2 AUDIO IN HI	COM 2 Audio Input	IN
15	J3401	COM 2 MIC AUDIO OUT HI	COM 2 Audio Output	OUT
14	J3401	COM 2 AUDIO LO	Ground Reference for COM 2	--

*Denotes Active Low (grounded when active)

Table 4-7 COM Audio and Mic Keys (GMA 345 3-COM unit only)

Pin	Connector	Pin Name	Description	I/O
3	J3401	COM 3 AUDIO IN	COM 3 Audio Input (GMA 345 3-COM unit only)	IN
4	J3401	COM 3 AUDIO LO	Ground Reference for COM 1 (GMA 345 3-COM unit only)	--
5	J3401	COM 3 MIC OUT	COM 3 Audio Output (GMA 345 3-COM unit only)	OUT
6	J3401	COM 3 MIC KEY* OUT	Enables transmission on the respective transceiver unit (GMA 345 3-COM unit only)	OUT

*Denotes Active Low (grounded when active)

4.5.3 Alert Audio I/O

Table 4-8 Alert Audio I/O

Pin	Connector	Pin Name	Description	I/O
31	J3401	ALERT 1 AUDIO IN HI	Alert 1 Audio Input	IN
32	J3401	ALERT 1 AUDIO IN LO	Ground Reference for Alert 1	--
15	J3402	ALERT 2 AUDIO IN HI	Alert 2 Audio Input	IN
14	J3402	ALERT 2 LO, FAILSAFE AUDIO IN LO	Ground Reference for Alert 2	
29	J3401	ALERT 3 AUDIO IN HI	Alert 3 Audio Input	IN
43	J3401	ALERT 3, 4, AUX 3 AUDIO IN LO	Ground Reference for Alert 3 & 4	--

Table 4-8 Alert Audio I/O

Pin	Connector	Pin Name	Description	I/O
44	J3401	ALERT 4 AUDIO IN HI	Alert 4 Audio Input	IN

4.5.4 RCVR, AUX, and NAV Audio Inputs

Table 4-9 AUX and NAV Audio Inputs

Pin	Connector	Pin Name	Description	I/O
21	J3401	RCVR 3 AUDIO IN HI (AUX 1)	RCVR 3/AUX 1 Audio Input	IN
22	J3401	RCVR 3 AUDIO IN LO (AUX 1)	Ground Reference for RCVR 3/AUX 1 Input	--
7	J3401	RCVR 4 AUDIO IN HI (AUX 2)	RCVR 4/AUX 2 Audio Input	IN
8	J3401	RCVR 4 AUDIO IN LO (AUX 2)	Ground Reference for RCVR 4/AUX 2 Input	--
23	J3401	RCVR 5 AUDIO IN HI (AUX 3)	RCVR 5/AUX 3 Audio Input	IN
43	J3401	ALERT 3, 4 AUX 3 AUDIO IN LO	Ground Reference for RCVR 5/AUX 3 Audio Input	--
17	J3401	NAV 1 AUDIO IN HI	NAV 1 Audio Input	IN
18	J3401	NAV 1 AUDIO IN LO	NAV 1 Ground Reference	--
19	J3401	NAV 2 AUDIO IN HI	NAV 2 Audio Input	IN
20	J3401	NAV 2 AUDIO IN LO	NAV 2 Ground Reference	--

NOTE

For GMA 342/345 2-COM units only, two buttons (AUX1 and AUX2) are used to select/deselect the 3 AUX inputs. Pressing the AUX1 button selects/deselects the AUX 1 and AUX 3 receivers. Pressing the AUX2 button selects/deselects the AUX 2 receiver.

NOTE

For the GMA 345 3-COM unit, a single AUX button is used to select all 3 AUX inputs for simultaneous monitoring.

4.5.5 Failsafe Warning Audio

Failsafe audio is audio from another device that is heard when the GMA 342/345 is in failsafe mode (power off or unit failure) and is desired to be heard in addition to the COM audio.

Table 4-10 Failsafe Warning Audio

Pin	Connector	Pin Name	Description	I/O
29	J3402	FAILSAFE WARN AUDIO IN HI	In the event of power loss, if wired, failsafe warning audio will be heard in the Pilot's Left headset in addition to the COM1 Audio Input.	IN
14	J3402	ALERT 2 LO, FAILSAFE AUDIO IN LO	Ground Reference for Failsafe Warning Audio Input	--

CAUTION

During failsafe mode both FAILSAFE WARN AUDIO IN HI and COM 1 AUDIO INPUT are connected to the PILOT HEADSET LEFT OUTPUT. When in failsafe the output of the COM 1 radio and the output of the device connected to FAILSAFE WARN AUDIO IN HI will become shorted together, potentially causing damage or interference. If the FAILSAFE WARN AUDIO IN HI is used, it may be necessary to install summing resistors in series between these sources and the inputs to the audio panel to protect the outputs from damage.

4.5.6 Music Inputs

The MUSIC LO signals are not the same reference as other ground connections. The MUSIC LO signals should be used as part of a differential pair (along with the MUSIC RIGHT and MUSIC LEFT signals). If the MUSIC LO signal is tied to a ground connection, the music will contain noise, and the audio quality will be degraded.

Table 4-11 Music Inputs

Pin	Connector	Pin Name	Description	I/O
23	J3402	MUSIC 1 IN LEFT	Music 1 Input	IN
24	J3402	MUSIC 1 IN RIGHT		
25	J3402	MUSIC 1 IN LO	Differential Reference for Music 1	--
26	J3402	MUSIC 2 IN LEFT	Music 2 Input	IN
27	J3402	MUSIC 2 IN RIGHT		
28	J3402	MUSIC 2 IN LO	Differential Reference for Music 2	--

4.5.7 Tel Audio I/O

Table 4-12 TEL Audio/XCVR 3 I/O (GMA 342/345 2-COM unit only)

Pin	Connector	Pin Name	Description	I/O
3	J3401	XCVR 3 AUDIO IN (WIRED TEL)	Telephone Audio Input	IN
4	J3401	XCVR 3 AUDIO LO (WIRED TEL)	Ground Reference for Telephone	--
5	J3401	XCVR 3 MIC OUT HI (WIRED TEL)	TEL MIC Audio Output	OUT

Table 4-13 TEL Audio I/O (GMA 345 3-COM unit only)

Pin	Connector	Pin Name	Description	I/O
25	J3401	WIRED TEL AUDIO IN HI	Telephone Audio Input (GMA 345 3-COM unit only)	IN
26	J3401	WIRED TEL AUDIO IN LO	Ground Reference for Telephone (GMA 345 3-COM unit only)	--
27	J3401	WIRED TEL MIC OUT HI	TEL MIC Audio Output (GMA 345 3-COM unit only)	OUT
28	J3401	WIRED TEL MIC OUT LO	Ground Reference for Telephone (GMA 345 3-COM unit only)	--

4.5.8 Headset Outputs

Garmin recommends that stereo headsets and stereo jacks be used to fully utilize the 3D audio features of the GMA 342/345. A true mono headset will work correctly with the GMA 342/345, but only mono (left channel) audio will be heard, and 3D audio will not be available (even if enabled). The GMA 342/345 will detect the mono headset (if stereo jacks are used), and automatically switch to mono operation. 3D audio is not available with mono headsets or in installations that use mono jacks for the headsets.

In aircraft systems that are wired with stereo headset jacks, if a true mono headset is plugged into the jack, the right audio channel is shorted to ground. In this condition the GMA 342/345 will detect the right channel short, and turn off the right channel audio to the headset output to protect the GMA 342/345 headset output from driving a signal into a short (and also for internal audio routing determined by the mono headset plugged into the headset jack).

In aircraft systems that use mono headset jacks, and are wired correctly (if used, mono jacks should always use left channel audio and headset lo), 3D audio will not be available, and only left channel audio for

music inputs or headset outputs will be heard.

Table 4-14 Headset Outputs

Pin	Connector	Pin Name	Description	I/O
16	J3402	PILOT HEADSET AUDIO OUT LEFT	Pilot Headset Audio Output	OUT
31	J3402	PILOT HEADSET AUDIO OUT RIGHT		OUT
1	J3402	PILOT HEADSET AUDIO OUT LO		--
3	J3402	COPILOT HEADSET AUDIO OUT LEFT	Copilot Headset Audio Output	OUT
4	J3402	COPILOT HEADSET AUDIO OUT RIGHT		OUT
2	J3402	COPILOT HEADSET AUDIO OUT LO		--
40	J3401	PASS HEADSET AUDIO OUT LEFT	Passenger Headset Audio Output	OUT
41	J3401	PASS HEADSET AUDIO OUT RIGHT		OUT
42	J3401	PASS HEADSET AUDIO OUT LO		--

4.5.9 Speaker Audio Out

Do not connect the LO of the speaker to the aircraft chassis. Two wires must be connected from the GMA 342/345 to the Speaker for the HI and LO signals. If speaker LO is connected to the aircraft chassis ground, the speaker will contain more noise than if connected back to the GMA 342/345 source connections.

Table 4-15 Speaker Audio Output

Pin	Connector	Pin Name	Description	I/O
43	J3402	SPEAKER AUDIO OUT LO	Speaker Audio Output Ground Reference	--
44	J3402	SPEAKER AUDIO OUT HI	Speaker Audio Output Hi	OUT

4.6 Discrete Inputs

The ICS KEYs are enabled by setting switch 1 of the DIP switch to ON. The COM Swap and Play key are always enabled.

Table 4-16 Discrete Inputs

Pin	Connector	Pin Name	Description	I/O
16	J3401	PILOT ICS KEY*	Discrete Input	IN
13	J3402	PASSENGER ICS KEY*	Discrete Input	IN
20	J3402	COM SWAP*	Discrete Input	IN
22	J3402	PLAY KEY*	Discrete Input	IN
30	J3402	COPILOT ICS KEY*	Discrete Input	IN

*Denotes Active Low (Inputs: ground to activate)

4.6.1 Discrete Outputs

Table 4-17 Discrete Outputs

Pin	Connector	Pin Name	Description	I/O
24	J3401	COM ACTIVE* OUT	Discrete Out	OUT
12	J3402	PA MUTE* OUT	Discrete Out	OUT
19	J3402	PA MODE SELECTED*	Discrete Out	OUT

*Denotes Active Low (Grounded when active)

4.7 Marker Beacon

Marker lamp outputs provide a variable DC voltage between 3V and 9V that drive incandescent lamps (>56Ω). Lamp brightness is controlled by the photocell.

MIDDLE MARKER SENSE OUT has the same behavior as MIDDLE MARKER LAMP OUT, but with half the voltage output into the rated minimum resistance of 4.7 kΩ.

Table 4-18 Discrete Outputs

Pin	Connector	Pin Name	I/O
1	J3401	MARKER ANTENNA IN HI	IN
2	J3401	MARKER ANTENNA IN LO	--
36	J3401	INNER MARKER LAMP OUT	OUT
37	J3401	OUTER MARKER LAMP OUT	OUT
38	J3401	MIDDLE MARKER LAMP OUT	OUT
39	J3401	MIDDLE MARKER SENSE OUT	OUT

APPENDIX:A INSTALLATION CONSIDERATIONS FOR UPGRADING FROM A GARMIN GMA 340

NOTE

This appendix contains installation considerations for upgrading from a Garmin GMA 340. This is not a set of comprehensive installation instructions for installing a Garmin GMA 342/345 in place of a Garmin GMA 340. Read this manual in its entirety before starting any installation.

A.1 Mechanical Considerations

- The GMA 340 installation rack is compatible with the GMA 342/345. Refer to Section 2.2 of this manual for a list of installation materials.
- The GMA 340 connectors are compatible and may be reused.

If replacing a GMA 340 with a GMA 342/345, the GMA 340 (330-00220-25) connector backshells can be reused. However, grounding the wire shields to the GMA 342/345 will be easier with the Garmin backshells in GPN 011-02302-00. The Garmin backshells also offer higher immunity to HIRF. Current installations will not be required to change the backshell type, but would benefit from doing so.

A.2 Electrical Considerations

Figure A-1 shows the GMA 340 pins that may need to be modified to accommodate the GMA 342/345. Refer to Section 4 and Appendix C of this manual for a list of pin functions and interconnect examples.

NOTE

If the GMA 340 installation to be replaced has three COM transceivers, the GMA 345 3-COM unit (Garmin PN 011-03520-20) should be used to accommodate the COM3 interface.

A.3 GMA 340 to GMA 342/345 Retrofit Connections

GMA 340
GMA 340 RETROFIT NOTES
FOR INSTALLING GMA 342/345

	J3401 P3401
COM 3 AUDIO IN HI	3
COM 3 AUDIO IN LO	4
COM 3 MIC AUDIO OUT HI	5
COM 3 MIC KEY* OUT	6
MASQ INHIBIT* IN	16
COM 3 SPKR LOAD IN HI	23
COM 3 SPKR LOAD IN LO	24
COM 1 SPKR LOAD IN HI	25
COM 1 SPKR LOAD IN LO	26
COM 2 SPKR LOAD IN HI	27
COM 2 SPKR LOAD IN LO	28
NO CONNECT	29
TEL RINGER AUDIO IN LO	43
TEL RINGER AUDIO IN HI	44

GMA 342/345
GMA 340 RETROFIT NOTES
FOR INSTALLING GMA 342/345

	J3401 P3401
WIRED TEL AUDIO IN (GMA 342/345)/ COM 3 AUDIO IN (GMA 345 3-COM)	3
WIRED TEL AUDIO LO (GMA 342/345)/ COM 3 AUDIO LO (GMA 345 3-COM)	4
WIRED TEL MIC OUT (GMA 342/345)/ COM 3 MIC OUT (GMA 345 3-COM)	5
RESERVED (GMA 342/345)/ COM 3 MIC KEY* OUT (GMA 345 3-COM)	6
PILOT ICS KEY*	16
RCVR 5 AUDIO IN HI (AUX 3)	23
COM ACTIVE* OUT	24
RESERVED (GMA 342/345)/ WIRED TEL AUDIO IN HI (GMA 345 3-COM)	25
RESERVED (GMA 342/345)/ WIRED TEL AUDIO IN LO (GMA 345 3-COM)	26
RESERVED (GMA 342/345)/ WIRED TEL MIC OUT HI (GMA 345 3-COM)	27
RESERVED (GMA 342/345)/ WIRED TEL MIC OUT LO (GMA 345 3-COM)	28
ALERT 3 AUDIO IN HI	29
ALERT 3, 4, AUX 3 AUDIO IN LO	43
ALERT 4 AUDIO IN HI	44

GMA 340
GMA 340 RETROFIT NOTES
FOR INSTALLING GMA 342/345

	J3402 P3402
ICS MUTE INHIBIT* IN	13
ICS MUTE INHIBIT RETURN	14
HIGH GAIN MUSIC SELECT*	15
8 OHM SELECT*	17
BUTTON PRESS TONE ENABLE*	19
NO CONNECT	22
MUTE ON COM TX* IN	30

GMA 342/345
GMA 340 RETROFIT NOTES
FOR INSTALLING GMA 342/345

	J3402 P3402
PASSENGER ICS KEY*	13
ALERT 2 LO, FAILSAFE AUDIO IN LO	14
ALERT 2 AUDIO IN HI	15
RESERVED	17
PA MODE SELECTED*	19
PLAY KEY*	22
COPILOT ICS KEY*	30

Figure A-1 GMA 340 to GMA 342/345 Retrofit Connections

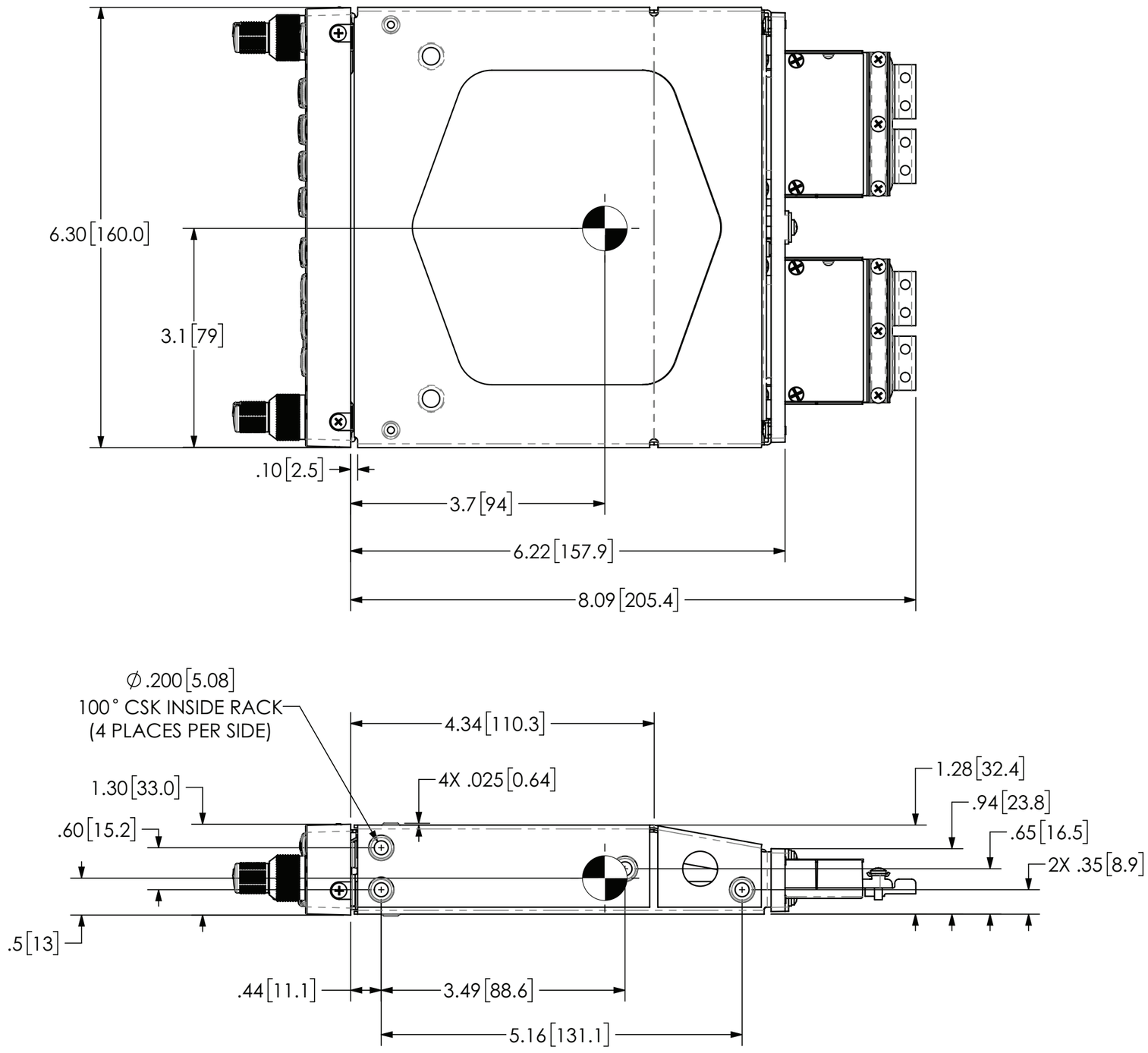

Figure B-1 GMA 342/345 Outline Drawing

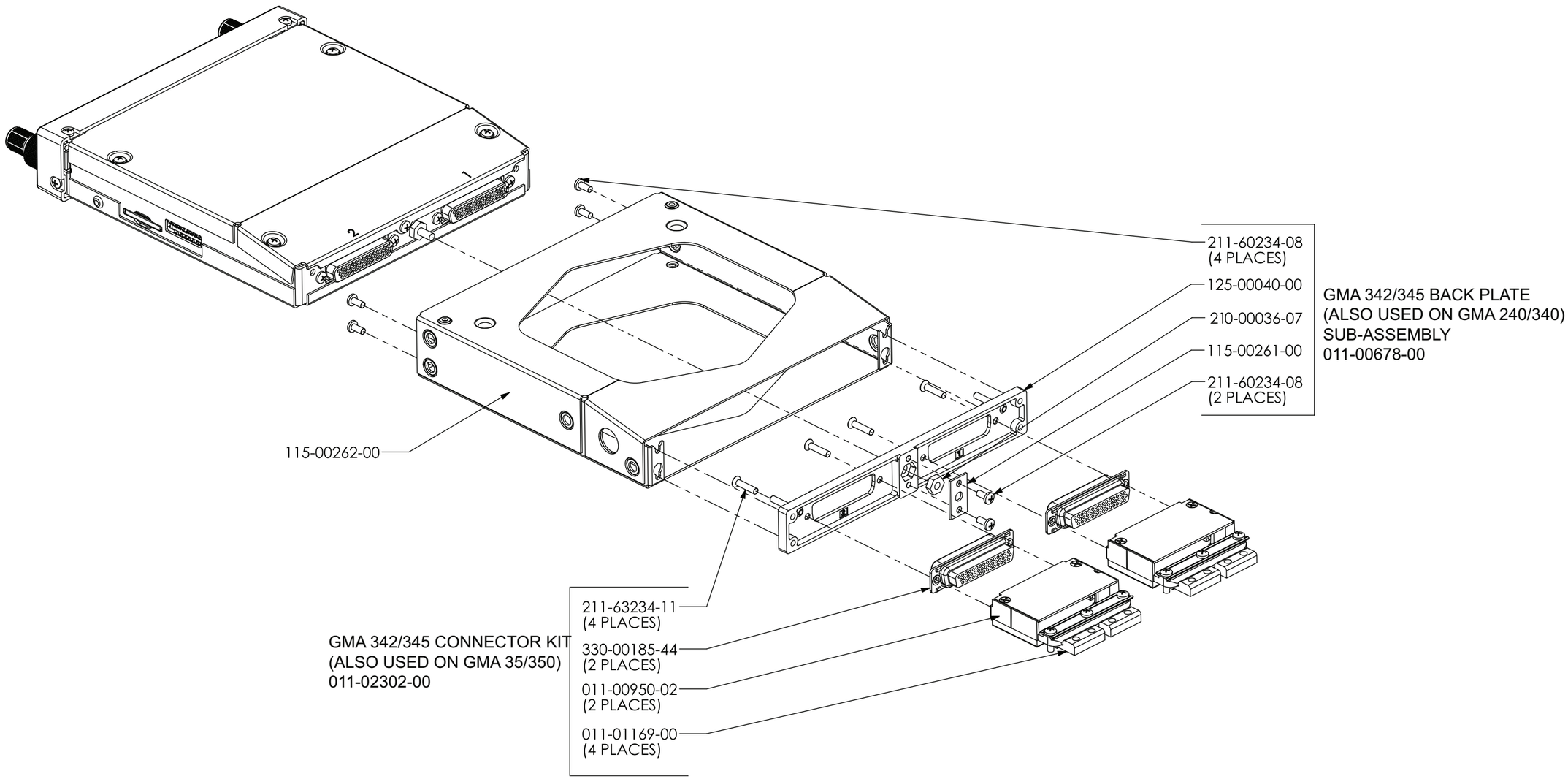

Figure B-2 GMA 342/345 Installation Drawing

OPTION 1:
STACK CUTOUT (RACK INSTALLED FROM FRONT OF AIRCRAFT PANEL)

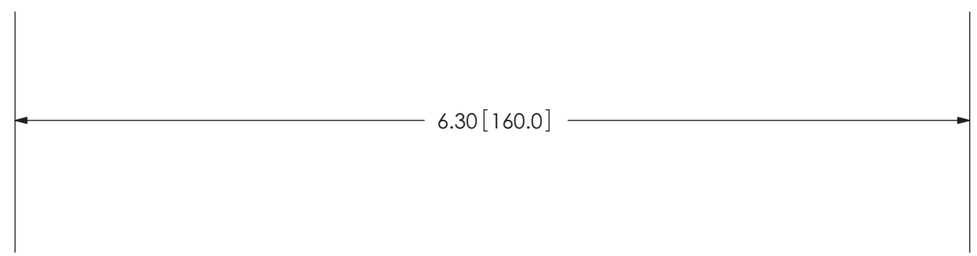

OPTION 2:
RADIO CUTOUT (RACK INSTALLED FROM FRONT OF AIRCRAFT PANEL)

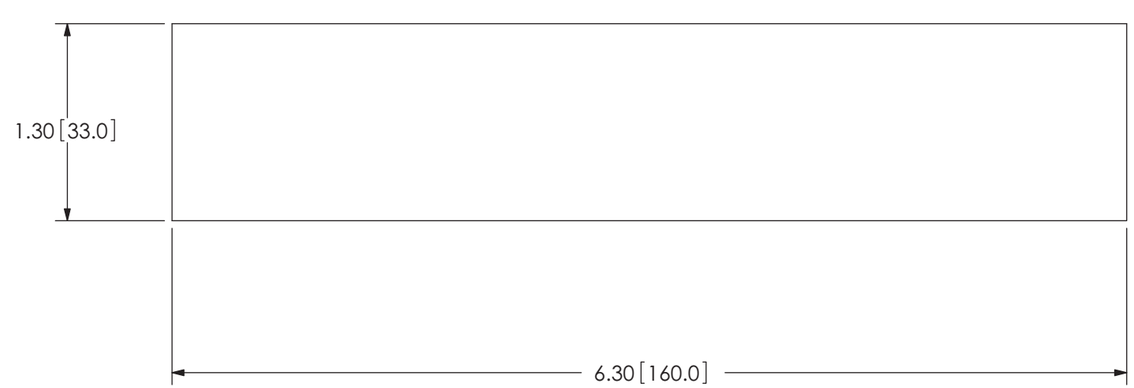

OPTION 3:
RADIO CUTOUT (RACK INSTALLED FROM BACK OF AIRCRAFT PANEL ONLY) MAXIMUM AIRCRAFT PANEL THICKNESS IS .125 INCH [3.2 mm]

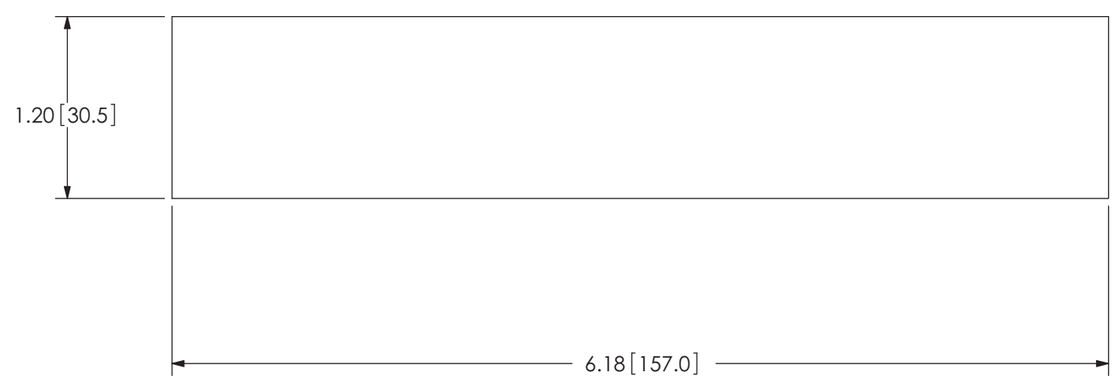

NOTES:
1. DIMENSIONS: INCH [mm]
2. IF THE FRONT LIP OF THE MOUNTING RACK IS BEHIND THE SURFACE OF THE AIRCRAFT PANEL THE UNIT CONNECTORS MAY NOT FULLY ENGAGE.

Figure B-3 GMA 342/345 Panel Cutout Drawing

GMA 342/345 INSTALLATION NOTES

1. UNLESS OTHERWISE INDICATED, ALL SHIELDS MUST BE TERMINATED AT THE GMA END ONLY.
   ALL SHIELDS ARE TIED TO THE SHIELD BLOCK OF THE BACKSHELL USING RING TERMINALS.
   USE 190-00313-09 FOR GUIDANCE FOR SHIELD TERMINATIONS.

2. UNLESS OTHERWISE NOTED, ALL STRANDED WIRE MUST CONFORM TO MIL-W-22759/16 OR EQUIVALENT.
   UNLESS OTHERWISE NOTED, ALL SHIELDED WIRE MUST CONFORM TO MIL-C-27500 OR EQUIVALENT.

3. UNLESS OTHERWISE NOTED, ALL WIRES ARE 22 AWG MINIMUM.

4. SYMBOL DESIGNATIONS AND CONNECTOR GUIDANCE:

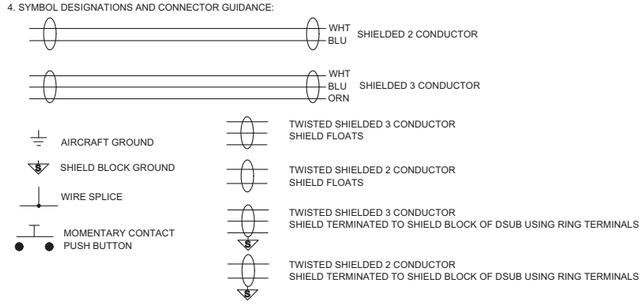

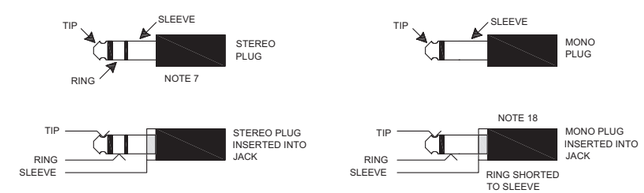

NOTE 5. AUDIO JACK ISOLATION DIAGRAM

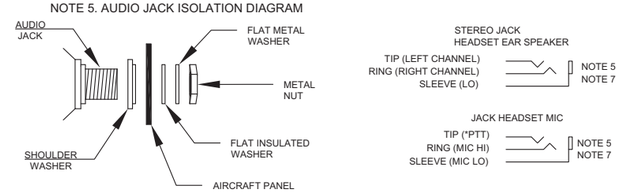

5. ISOLATE JACK SLEEVE (MOUNTING NUT AND NUT PLATE) FROM AIRCRAFT CHASSIS.
   ALL HEADSET, MICROPHONE, AND MUSIC PHONE JACKS MUST BE ELECTRICALLY ISOLATED FROM GROUND.
   REFER TO THE FIGURE ABOVE FOR HOW THE JACK IS ISOLATED. NOT ISOLATING WILL CAUSE GROUND LOOPS AND NOISE.
6. THE CONNECTION BETWEEN PTT AND THE MIC JACK TIP IS REQUIRED IF HAND MICS WILL BE USED. *DENOTES AN ACTIVE LOW SIGNAL.
7. THE HEADSET EAR SPEAKER SLEEVE DIAMETER IS 0.25 INCH AND LARGER THAN THE HEADSET MIC SLEEVE DIAMETER 0.206 INCH.
8. IF THE TRANSCIEVER HAS A SEPARATE RETURN FOR AUDIO IN AND AUDO OUT, CONNECT BOTH TO THE GMA AUDIO LO AT THE GMA.
9. DO NOT CONNECT THE SPEAKER GROUND RETURN TO THE AIRCRAFT CHASSIS. THE GROUND RETURN MUST GO TO THE GMA.
10. THE LIGHTING BUS VOLTAGE RANGE IS CONFIGURABLE FOR EITHER 14 OR 28 VOLT SYSTEMS. REFER TO INSTALL MANUAL CONFIGURATION OPTIONS.
11. GARMIN RECOMMENDS USING STEREO HEADPHONES. IF MONO JACKS ARE DESIRED, GARMIN RECOMMENDS THE USE OF THE LEFT OUTPUT ONLY (LEAVE THE RIGHT CHANNEL UNCONNECTED). DO NOT CONNECT THE LEFT AND RIGHT CHANNELS TOGETHER.
12. THE TELEPHONE INTERFACE MAY BE WIRED TO A FIXED MOUNTED TELEPHONE SOURCE (SHOWN) OR TO A SUITABLE JACK FOR PORTABLE TELEPHONE.
13. TRANSCEIVER INTERFACES CAN ALSO BE WIRED THROUGH SUITABLE JACKS AND CABLES TO HANDHELD COMS THAT HAVE HEADSET INTERFACE CAPABILITY. THE HANDHELD'S HEADSET OUTPUT (LEFT CHANNEL ONLY IF STEREO) CONNECTS TO THE GMA'S COM AUDIO IN HI AND COM AUDIO LO PINS, THE HANDHELD'S MIC INPUT CONNECTS TO GMA'S COM MIC AUDIO OUT HI AND COM AUDIO LO PINS, AND THE HANDHELD'S PTT KEY CONNECTS TO GMA'S COM MIC KEY* OUT. SEE TRANSCEIVER'S INSTRUCTION MANUAL.
14. * DENOTES ACTIVE LOW.
15. MONO ONLY HEADSET JACK CONNECTION DETAIL.
16. USE A MINIMUM 10 WATT SPEAKER.
    USE 8 OHM SPEAKER FOR 28 VOLT SYSTEMS ONLY.
    USE 4 OHM SPEAKER FOR 14 OR 28 VOLT SYSTEMS.
17. ICS KEY INPUTS ARE ALSO COMPATIBLE WITH TWO-STAGE PTT KEYS IN WHICH THE FIRST DETENT ACTIVATES THE ICS KEY AND THE SECOND DETENT ACTIVATES THE TRANSCEIVER PTT (CREW ONLY) FOR THAT POSITION.
18. PLUGGING A MONORAIL HEADSET INTO A STEREO JACK SHORTS THE RIGHT CHANNEL OUTPUT TO GROUND. THIS WILL CAUSE EXCESS CURRENT TO BE DRAWN. THIS WILL NOT DAMAGE THE GMA, BUT IS NOT RECOMMENDED. THE GMA WILL DETECT THE SHORTED CHANNEL AND SHUT THE AUDIO TO THE SHORTED CHANNEL OFF TO PREVENT THE INTERNAL AMPLIFIER FROM DRIVING A SIGNAL INTO A SHORT.
19. THE MUSIC LO SIGNALS ARE NOT THE SAME REFERENCE AS OTHER GROUNDS. THE MUSIC LO SIGNALS ARE PART OF A DIFFERENTIAL PAIR WITH THE RIGHT AND LEFT SIGNALS. IF THE MUSIC LO SIGNAL IS TIED TO A GROUND, THE MUSIC WILL CONTAIN NOISE, AND THE AUDIO QUALITY WILL BE DEGRADED.
20. USE RG400 FOR MARKER BEACON COAXIAL CABLE. THE RF MATING CONNECTION FOR THE ANTENNA (BNC, TNC, N) WILL DEPEND ON THE MARKER BEACON ANTENNA USED FOR DSUB COAXIAL CABLE INSTALLATION GUIDELINES REFER TO MARKER INSTALLATION SECTION OF INSTALL MANUAL. AVOID SHARP CORNERS AND ROUTE AWAY FROM HIGH CURRENT WIRING AND ANY TRANSMITTER CABLES.

Figure C-1 Notes for Example Interconnect Drawings

APPENDIX C INTERCONNECT DRAWINGS

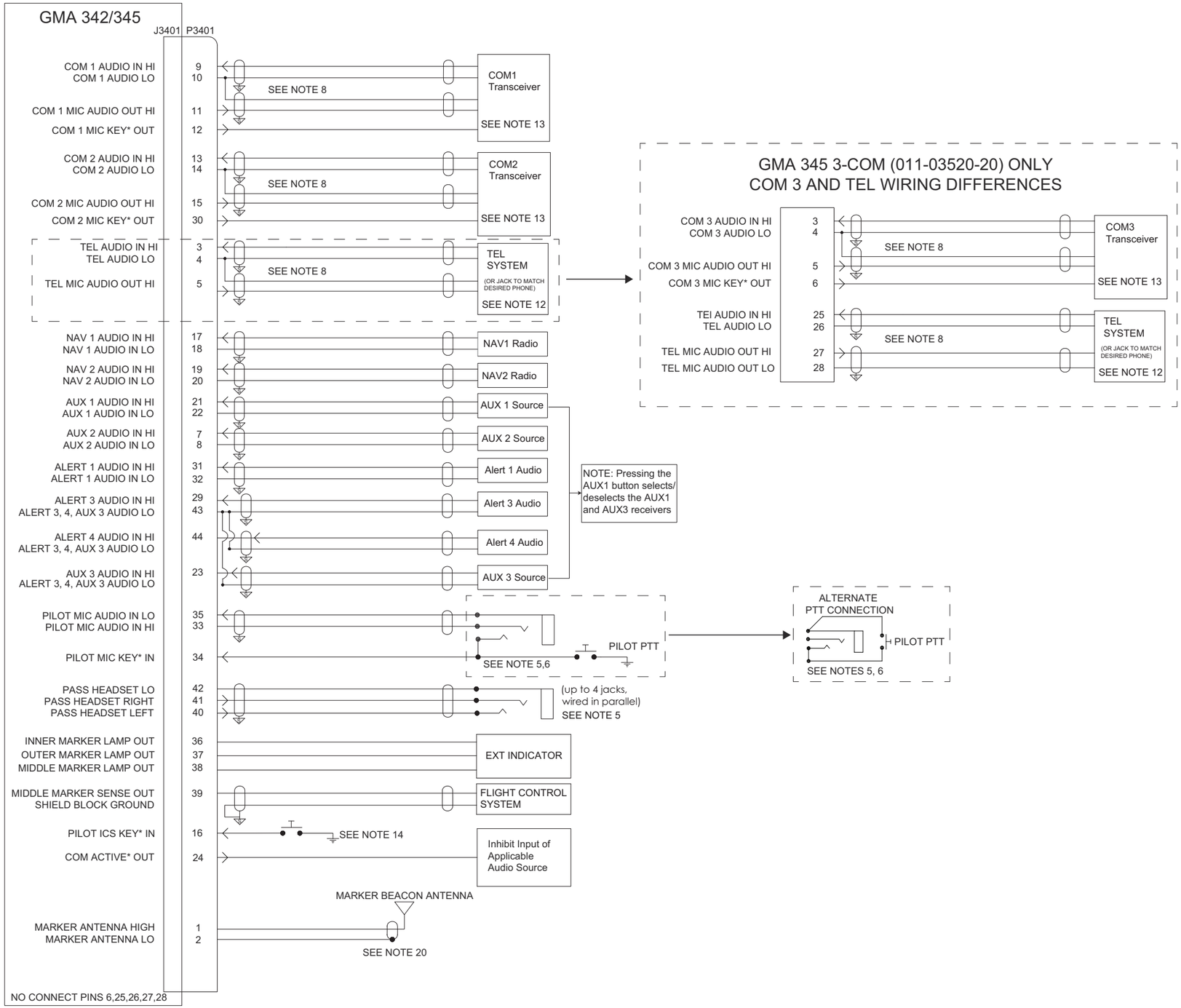

Figure C-2 J3401 Connector Example Interconnect Drawing

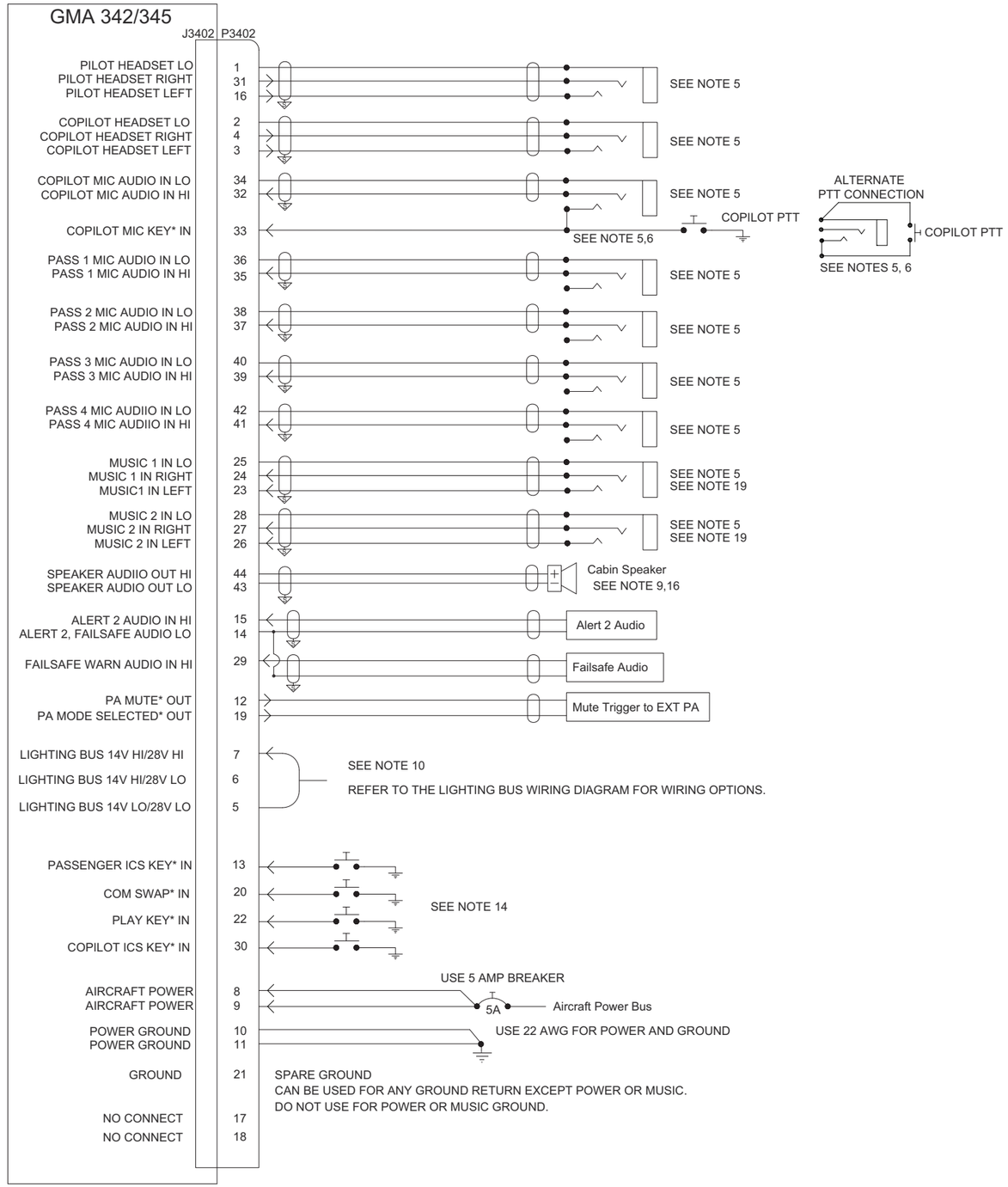

Figure C-3 J3402 Connector Example Interconnect Drawing

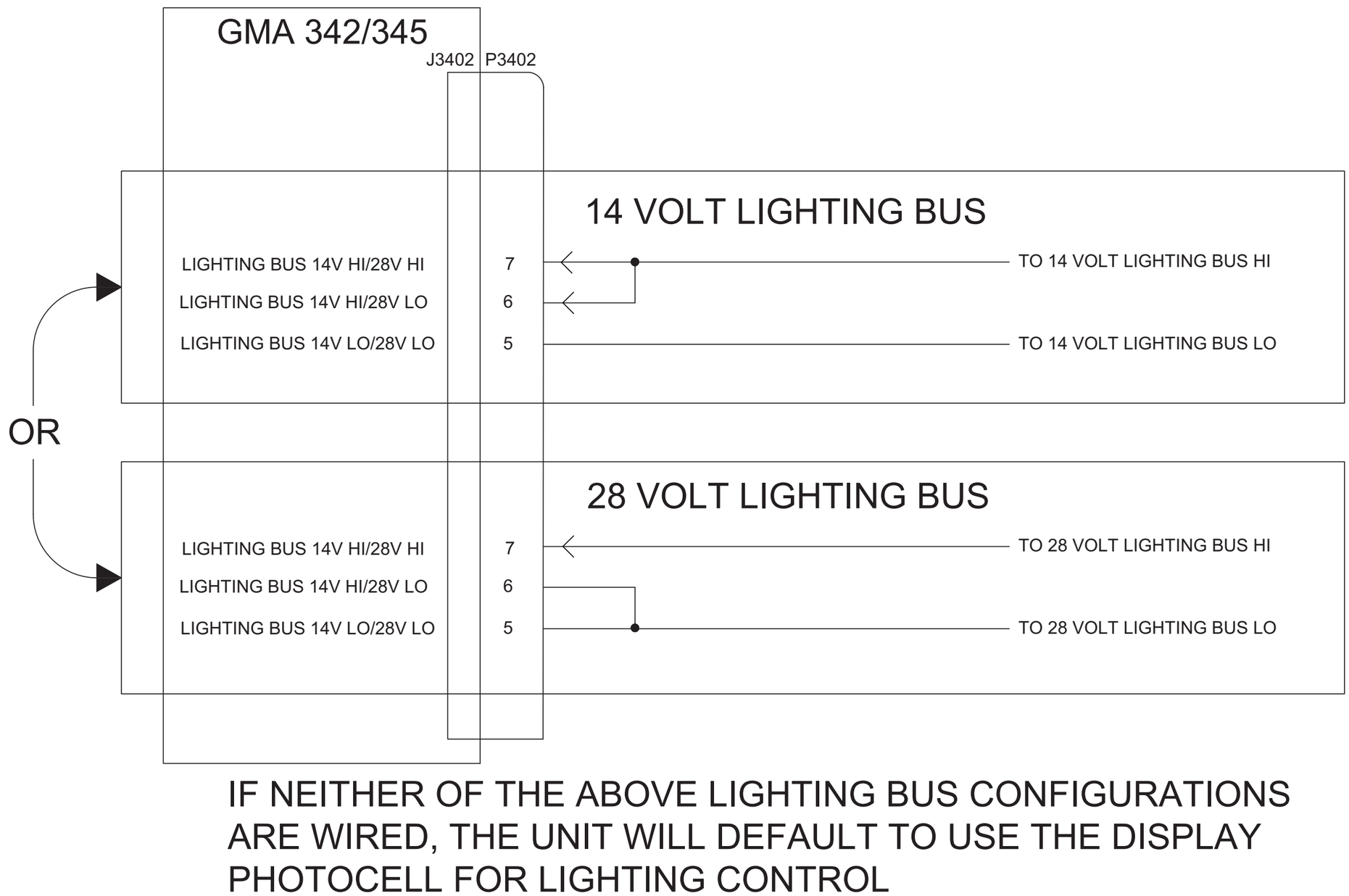

Figure C-4 Lighting Bus Example Interconnect Drawing

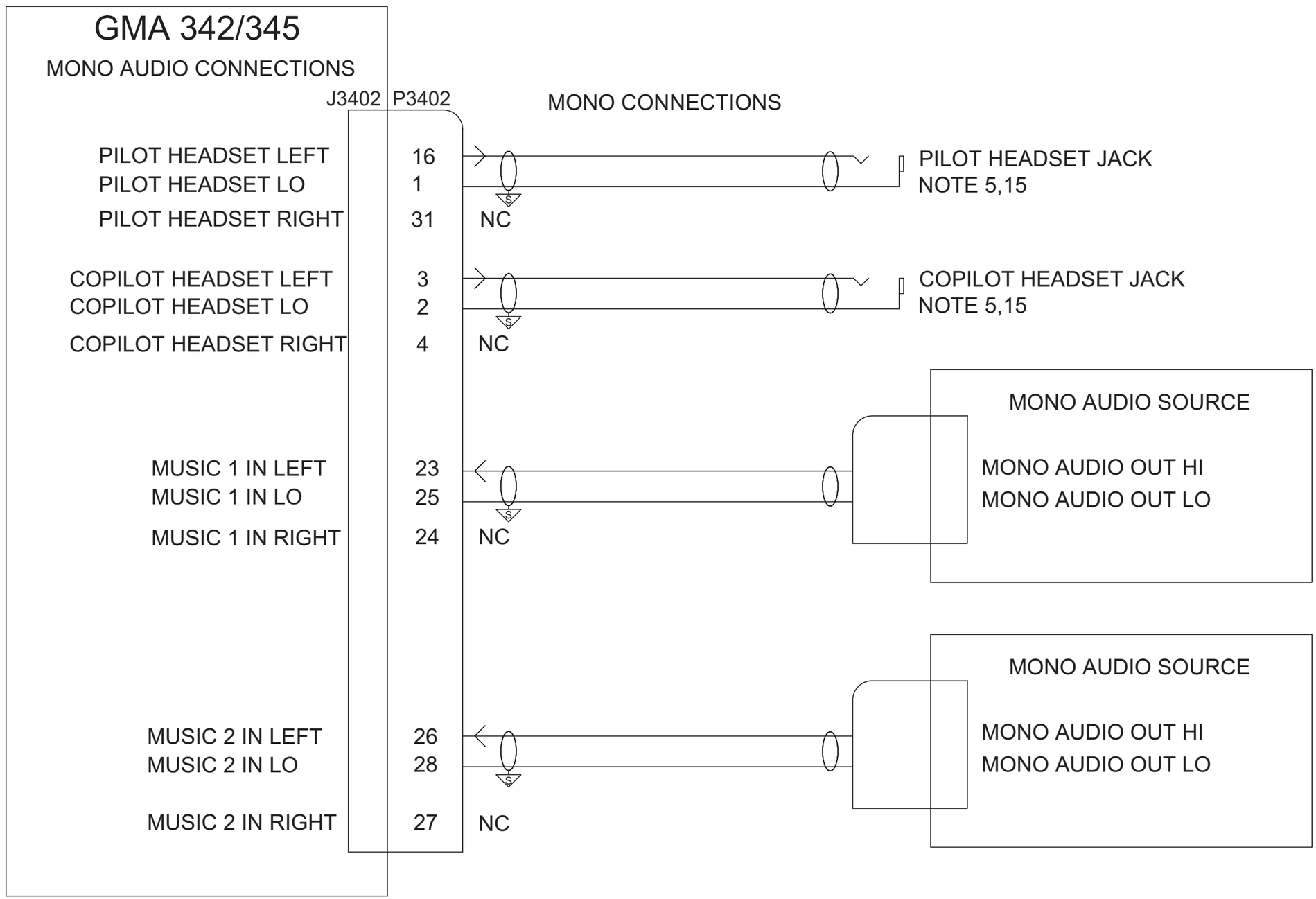

Figure C-5 Mono Audio Example Interconnect Drawing

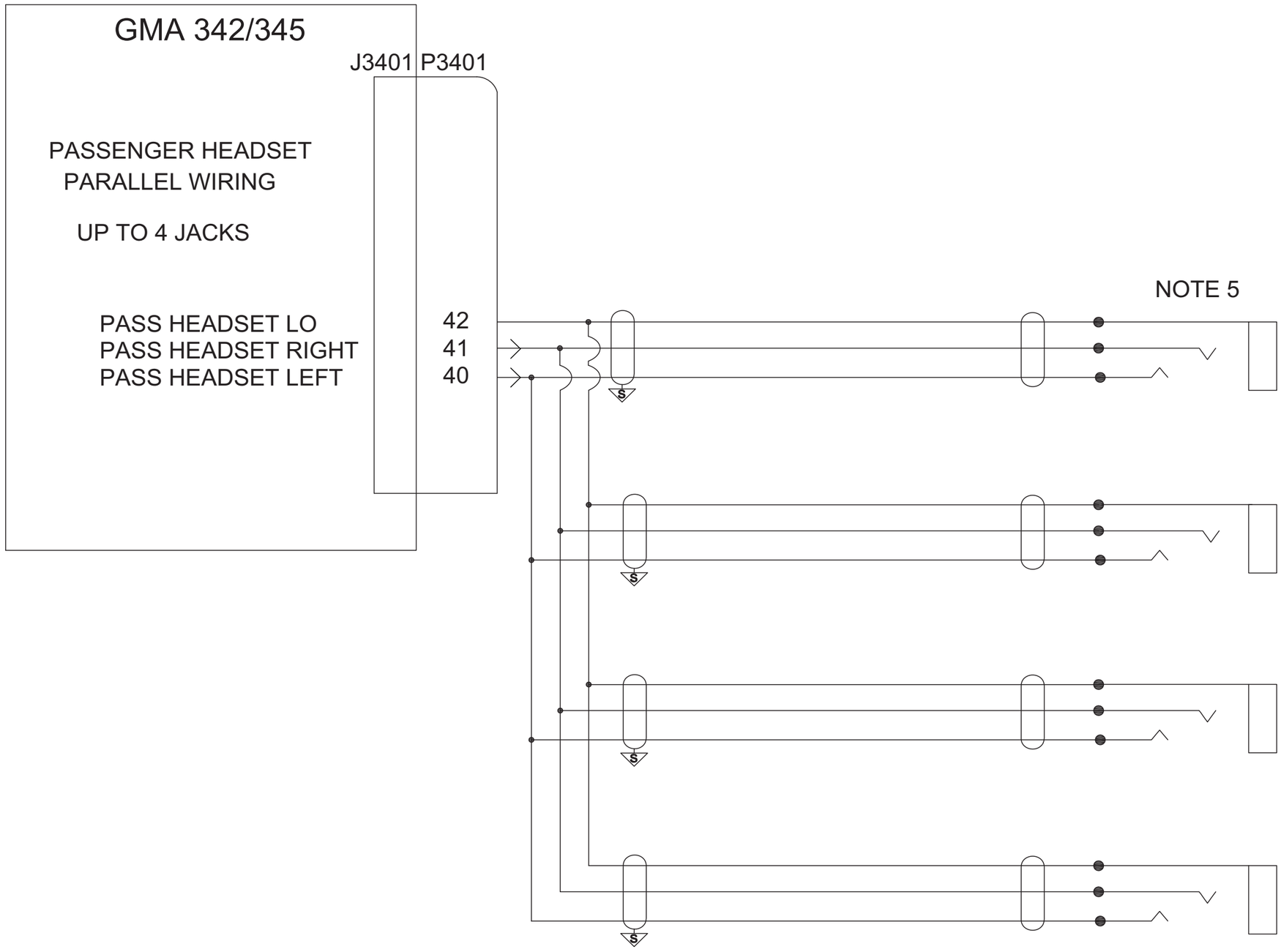

Figure C-6 Four Passenger Headset Wiring Example Interconnect Drawing

APPENDIX C INTERCONNECT DRAWINGS

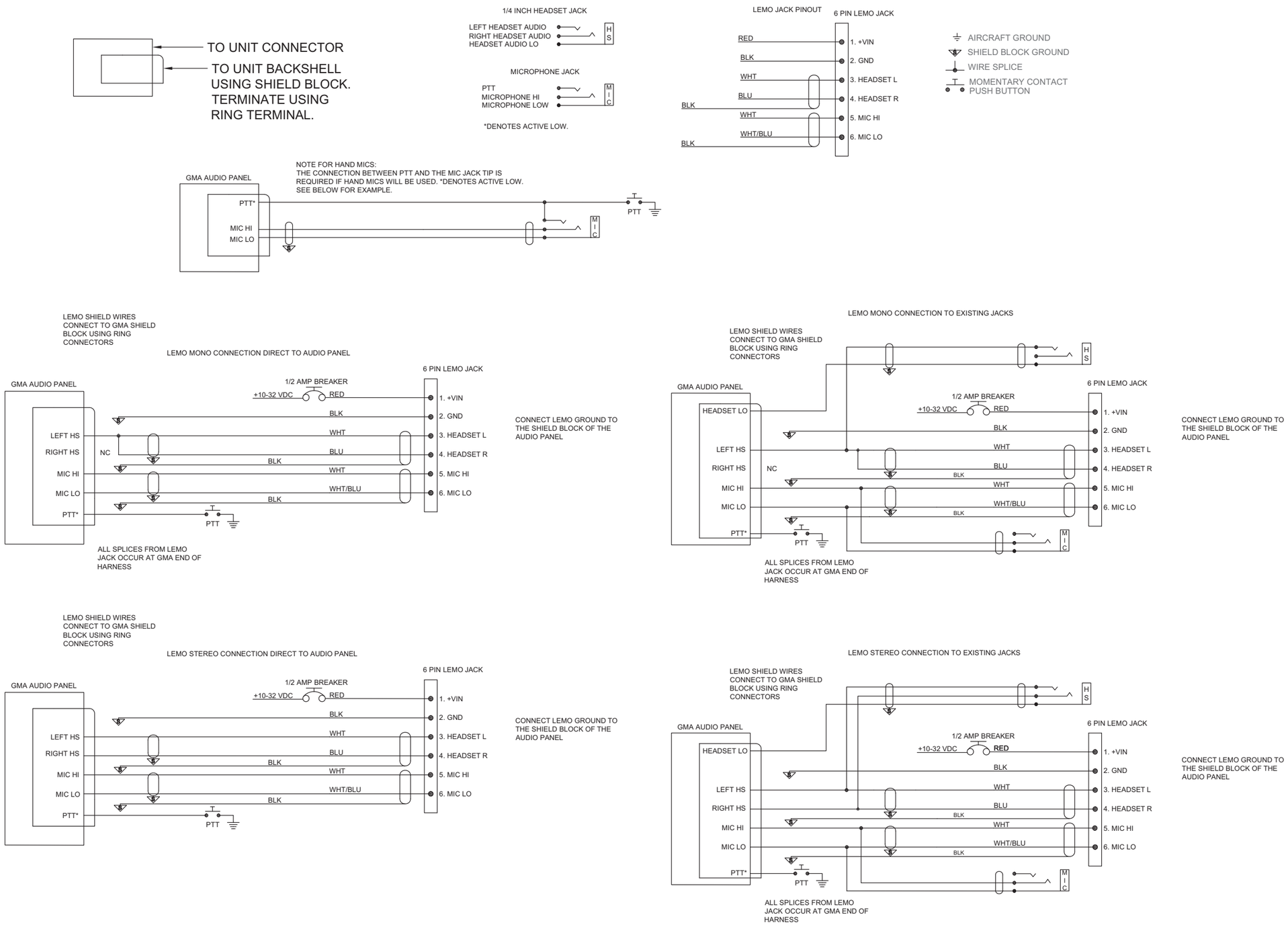

Figure C-7 LEMO Connector Example Interconnect Drawing

GMA342/345 J3401 (NOT APPLICABLE TO 3-COM UNITS)

15 COM 2 MIC AUDIO OUT HI	14 COM 2 AUDIO LO	13 COM 2 AUDIO IN HI	12 COM 1 MIC KEY* OUT	11 COM 1 MIC AUDIO OUT HI	10 COM 1 AUDIO LO	9 COM 1 AUDIO IN HI	8 RCVR 4 AUDIO IN LO (AUX 2)	7 RCVR 4 AUDIO IN HI (AUX 2)	6 RESERVED	5 XCVR 3 MIC OUT HI (WIRED TEL)	4 XCVR 3 AUDIO LO (WIRED TEL)	3 XCVR 3 AUDIO IN (WIRED TEL)	2 MARKER ANTENNA LO	1 MARKER ANTENNA HI
30 COM 2 MIC KEY* OUT	29 ALERT 3 AUDIO IN HI	28 RESERVED	27 RESERVED	26 RESERVED	25 RESERVED	24 DISCRETE C OUT* (COM ACTIVE OUT)	23 RCVR 5 AUDIO IN HI (AUX 3)	22 RCVR 3 AUDIO IN LO (AUX 1)	21 RCVR 3 AUDIO IN HI (AUX 1)	20 NAV 2 AUDIO IN LO	19 NAV 2 AUDIO IN HI	18 NAV 1 AUDIO IN LO	17 NAV 1 AUDIO IN HI	16 DISCRETE 1 INPUT* (PILOT ICS KEY)
44 ALERT 4 AUDIO IN HI	43 ALERT 3, 4, AUX 3 AUDIO IN LO	42 PASS HEADSET AUDIO OUT LO	41 PASS HEADSET AUDIO OUT RIGHT	40 PASS HEADSET AUDIO OUT LEFT	39 MIDDLE MARKER SENSE OUT	38 MIDDLE MARKER LAMP OUT	37 OUTER MARKER LAMP OUT	36 INNER MARKER LAMP OUT	35 PILOT MIC AUDIO IN LO	34 PILOT MIC KEY* IN	33 PILOT MIC AUDIO IN HI	32 ALERT 1 AUDIO IN LO	31 ALERT 1 AUDIO IN HI	

GMA342/345 J3402 (NOT APPLICABLE TO 3-COM UNITS)

15 ALERT 2 AUDIO IN HI	14 ALERT 2 LO, FAILSAFE AUDIO IN LO	13 DISCRETE 3 INPUT* (PASS ICS KEY)	12 DISCRETE D OUT* (PA MUTE OUT)	11 POWER GROUND	10 POWER GROUND	9 AIRCRAFT POWER	8 AIRCRAFT POWER	7 LIGHTING BUS 14V HI/28V HI	6 LIGHTING BUS 14V HI/28V LO	5 LIGHTING BUS 14V LO/28V LO	4 COPILOT HEADSET AUDIO OUT RIGHT	3 COPILOT HEADSET AUDIO OUT LEFT	2 COPILOT HEADSET AUDIO OUT LO	1 PILOT HEADSET AUDIO OUT LO
30 DISCRETE 6 INPUT* (COPIILOT ICS KEY)	29 FAILSAFE WARN AUDIO IN HI	28 MUSIC 2 IN LO	27 MUSIC 2 IN RIGHT	26 MUSIC 2 IN LEFT	25 MUSIC 1 IN LO	24 MUSIC 1 IN RIGHT	23 MUSIC 1 IN LEFT	22 DISCRETE 5 INPUT* (PLAY KEY)	21 GROUND	20 DISCRETE 4 INPUT* (COM SWAP)	19 DISCRETE F OUT* (PA MODE SELECTED)	18 RESERVED	17 RESERVED	16 PILOT HEADSET AUDIO OUT LEFT
44 SPEAKER AUDIO OUT HI	43 SPEAKER AUDIO OUT LO	42 PASS 4 MIC AUDIO IN LO	41 PASS 4 MIC AUDIO IN HI	40 PASS 3 MIC AUDIO IN LO	39 PASS 3 MIC AUDIO IN HI	38 PASS 2 MIC AUDIO IN LO	37 PASS 2 MIC AUDIO IN HI	36 PASS 1 MIC AUDIO IN LO	35 PASS 1 MIC AUDIO IN HI	34 COPILOT MIC AUDIO IN LO	33 COPILOT MIC KEY* IN	32 COPILOT MIC AUDIO IN HI	31 PILOT HEADSET AUDIO OUT RIGHT	

Figure C-8 J3401 & J3402 Connector Layout Drawing (not applicable to 3-COM Units)

GMA342/345 J3401 (3-COM UNIT ONLY)

15 COM 2 MIC AUDIO OUT HI	14 COM 2 AUDIO LO	13 COM 2 AUDIO IN HI	12 COM 1 MIC KEY* OUT	11 COM 1 MIC AUDIO OUT HI	10 COM 1 AUDIO LO	9 COM 1 AUDIO IN HI	8 RCVR 4 AUDIO IN LO (AUX 2)	7 RCVR 4 AUDIO IN HI (AUX 2)	6 COM 3 MIC KEY* OUT	5 COM 3 MIC OUT	4 COM 3 AUDIO LO	3 COM 3 AUDIO IN	2 MARKER ANTENNA LO	1 MARKER ANTENNA HI

30 COM 2 MIC KEY* OUT	29 ALERT 3 AUDIO IN HI	28 WIRED TEL MIC OUT LO	27 WIRED TEL MIC OUT HI	26 WIRED TEL AUDIO IN LO	25 WIRED TEL AUDIO IN HI	24 DISCRETE C OUT* (COM ACTIVE OUT)	23 RCVR 5 AUDIO IN HI (AUX 3)	22 RCVR 3 AUDIO IN LO (AUX 1)	21 RCVR 3 AUDIO IN HI (AUX 1)	20 NAV 2 AUDIO IN LO	19 NAV 2 AUDIO IN HI	18 NAV 1 AUDIO IN LO	17 NAV 1 AUDIO IN HI	16 DISCRETE 1 INPUT* (PILOT ICS KEY)

44 ALERT 4 AUDIO IN HI	43 ALERT 3, 4, AUX 3 AUDIO IN LO	42 PASS HEADSET AUDIO OUT LO	41 PASS HEADSET AUDIO OUT RIGHT	40 PASS HEADSET AUDIO OUT LEFT	39 MIDDLE MARKER SENSE OUT	38 MIDDLE MARKER LAMP OUT	37 OUTER MARKER LAMP OUT	36 INNER MARKER LAMP OUT	35 PILOT MIC AUDIO IN LO	34 PILOT MIC KEY* IN	33 PILOT MIC AUDIO IN HI	32 ALERT 1 AUDIO IN LO	31 ALERT 1 AUDIO IN HI

GMA342/345 J3402 (3-COM UNIT ONLY)

15 ALERT 2 AUDIO IN HI	14 ALERT 2 LO, FAILSAFE AUDIO IN LO	13 DISCRETE 3 INPUT* (PASS ICS KEY)	12 DISCRETE D OUT* (PA MUTE OUT)	11 POWER GROUND	10 POWER GROUND	9 AIRCRAFT POWER	8 AIRCRAFT POWER	7 LIGHTING BUS 14V HI/28V HI	6 LIGHTING BUS 14V HI/28V LO	5 LIGHTING BUS 14V LO/28V LO	4 COPILOT HEADSET AUDIO OUT RIGHT	3 COPILOT HEADSET AUDIO OUT LEFT	2 COPILOT HEADSET AUDIO OUT LO	1 PILOT HEADSET AUDIO OUT LO

30 DISCRETE 6 INPUT* (COPIILOT ICS KEY)	29 FAILSAFE WARN AUDIO IN HI	28 MUSIC 2 IN LO	27 MUSIC 2 IN RIGHT	26 MUSIC 2 IN LEFT	25 MUSIC 1 IN LO	24 MUSIC 1 IN RIGHT	23 MUSIC 1 IN LEFT	22 DISCRETE 5 INPUT* (PLAY KEY)	21 GROUND	20 DISCRETE 4 INPUT* (COM SWAP)	19 DISCRETE F OUT* (PA MODE SELECTED)	18 RESERVED	17 RESERVED	16 PILOT HEADSET AUDIO OUT LEFT

44 SPEAKER AUDIO OUT HI	43 SPEAKER AUDIO OUT LO	42 PASS 4 MIC AUDIO IN LO	41 PASS 4 MIC AUDIO IN HI	40 PASS 3 MIC AUDIO IN LO	39 PASS 3 MIC AUDIO IN HI	38 PASS 2 MIC AUDIO IN LO	37 PASS 2 MIC AUDIO IN HI	36 PASS 1 MIC AUDIO IN LO	35 PASS 1 MIC AUDIO IN HI	34 COPILOT MIC AUDIO IN LO	33 COPILOT MIC KEY* IN	32 COPILOT MIC AUDIO IN HI	31 PILOT HEADSET AUDIO OUT RIGHT

Figure C-9 J3401 & J3402 Connector Layout Drawing for 3-COM units